National Aeronautics and Space Administration
Goddard Space Flight Center
Greenbelt, MD 20771

April 22, 2016

Reply to Attn of: 250

Maryland Department of the Environment
Water Management Administration
Compliance Program
1800 Washington Boulevard, Suite 425
Baltimore, MD 21230-1708

Enclosed are National Pollutant Discharge Elimination System (NPDES) application forms for renewal of the NASA Goddard Space Flight Center (GSFC) State Discharge Permit (Permit No. 08-DP-3156A). GSFC's permit will expire May 31, 2017. The current permit allows the discharge of noncontact cooling water and boiler blowdown from GSFC's Central Heating and Refrigeration Plant (Building 24) and noncontact cooling water from GSFC's East Campus Chiller Plant (Building 31).

Data provided on the enclosed EPA Forms 3510-2C and 3510-2E are from grab samples collected as part of GSFC's required monitoring from January 2015 to December 2015. Additional monitoring for parameters not currently covered by GSFC's permit were collected as grab samples at Outfall 001 and Outfall 004 during this same time period.

GSFC submitted a request to MDE to relocate the pH sampling point for Outfall 001 in a letter dated March 2, 2015. GSFC installed a pH neutralization system for the boiler plant that discharges to Outfall 001 in January 2015 in an effort to meet the new pH compliance limits. GSFC requested that the pH sampling point be moved to a new location that incorporated all permitted effluents and minimized the effect of natural environmental pH influences found in the ponds that discharge to Outfall 001. GSFC received the approved permit modification and impacted pages from MDE in a letter dated July 2, 2015. The monthly pH monitoring data provided on Form 3510-2C for Outfall 001 was collected at the new sampling point beginning August 2015.

No changes to the NPDES Chemical Summary List have been made since the last notification of water treatment additive changes submitted to the Department in March 2016.

Line drawing schematics for the Building 24 Boiler Plant and Cooling Tower processes are current as of January 2016. These schematics are being submitted in accordance with Item II-A of EPA Form 3510-2C.

GSFC is currently evaluating applicability of the 12-SW general stormwater permit to co-located industrial activities at the facility. This evaluation is being performed concurrently,

yet independently, of the permit renewal process addressed in this letter. The Department can expect a formal response regarding requested coverage under the 12-SW permit in the coming months.

If you have any questions concerning this matter, please contact Ms. Janine Pollack at Janine.Pollack@nasa.gov or (301) 286-0509.

Edward A. Connell
Chief, Medical and Environmental Management Division

Enclosures

Please print or type in the unshaded areas only.

Form Approved. OMB No. 2040-0086.

FORM 1 GENERAL

EPA

U.S. ENVIRONMENTAL PROTECTION AGENCY

GENERAL INFORMATION

Consolidated Permits Program

(Read the "General Instructions" before starting.)

I. EPA I.D. NUMBER

S		TRS	C
F	MD9800013865		D
1	2 — 13	14	15

LABEL ITEMS	
I. EPA I.D. NUMBER	PLEASE PLACE LABEL IN THIS SPACE
III. FACILITY NAME	
V. FACILITY MAILING ADDRESS	
VI. FACILITY LOCATION	

GENERAL INSTRUCTIONS

If a preprinted label has been provided, affix it in the designated space. Review the information carefully; if any of it is incorrect, cross through it and enter the correct data in the appropriate fill-in area below. Also, if any of the preprinted data is absent *(the area to the left of the label space lists the information that should appear)*, please provide it in the proper fill-in area(s) below. If the label is complete and correct, you need not complete Items I, III, V, and VI *(except VI-B which must be completed regardless)*. Complete all items if no label has been provided. Refer to the instructions for detailed item descriptions and for the legal authorizations under which this data is collected.

II. POLLUTANT CHARACTERISTICS

INSTRUCTIONS: Complete A through J to determine whether you need to submit any permit application forms to the EPA. If you answer "yes" to any questions, you must submit this form and the supplemental form listed in the parenthesis following the question. Mark "X" in the box in the third column if the supplemental form is attached. If you answer "no" to each question, you need not submit any of these forms. You may answer "no" if your activity is excluded from permit requirements; see Section C of the instructions. See also, Section D of the instructions for definitions of **bold-faced terms.**

SPECIFIC QUESTIONS	Mark "X" YES	NO	FORM ATTACHED	SPECIFIC QUESTIONS	Mark "X" YES	NO	FORM ATTACHED
A. Is this facility a **publicly owned treatment works** which results in a **discharge** to **waters of the U.S.**? (FORM 2A)		X		B. Does or will this facility *(either existing or proposed)* include a **concentrated animal feeding operation** or **aquatic animal production facility** which results in a **discharge** to **waters of the U.S.**? (FORM 2B)		X	
	16	17	18		19	20	21
C. Is this a facility which currently results in **discharges** to **waters of the U.S.** other than those described in A or B above? (FORM 2C) (FORM 2E)	X		X	D. Is this a proposed facility *(other than those described in A or B above)* which will result in a **discharge** to **waters of the U.S.**? (FORM 2D)		X	
	22	23	24		25	26	27
E. Does or will this facility treat, store, or dispose of **hazardous wastes**? (FORM 3)		X		F. Do you or will you inject at this facility industrial or municipal effluent below the lowermost stratum containing, within one quarter mile of the well bore, underground sources of drinking water? (FORM 4)		X	
	28	29	30		31	32	33
G. Do you or will you inject at this facility any produced water or other fluids which are brought to the surface in connection with conventional oil or natural gas production, inject fluids used for enhanced recovery of oil or natural gas, or inject fluids for storage of liquid hydrocarbons? (FORM 4)		X		H. Do you or will you inject at this facility fluids for special processes such as mining of sulfur by the Frasch process, solution mining of minerals, in situ combustion of fossil fuel, or recovery of geothermal energy? (FORM 4)		X	
	34	35	36		37	38	39
I. Is this facility a proposed **stationary source** which is one of the 28 industrial categories listed in the instructions and which will potentially emit 100 tons per year of any air pollutant regulated under the Clean Air Act and may affect or be located in an attainment area? (FORM 5)		X		J. Is this facility a proposed **stationary source** which is NOT one of the 28 industrial categories listed in the instructions and which will potentially emit 250 tons per year of any air pollutant regulated under the Clean Air Act and may affect or be located in an **attainment area**? (FORM 5)		X	
	40	41	42		43	44	45

III. NAME OF FACILITY

C 1 SKIP NASA Goddard Space Flight Center

16 18 – 29 30 — 69

IV. FACILITY CONTACT

A. NAME & TITLE *(last, first, & title)*	B. PHONE *(area code & no.)*
C 2 Pollack, Janine, Environmental Engineer	(301) 286-0509
15 16 — 45	46 47 48 49 51 55 — 59

V. FACILTY MAILING ADDRESS

A. STREET OR P.O. BOX

C 3 Code 250

15 16 — 45

B. CITY OR TOWN	C. STATE	D. ZIP CODE
C 4 Greenbelt	MD	20771
15 16 — 40	41 42	47 — 51

VI. FACILITY LOCATION

A. STREET, ROUTE NO. OR OTHER SPECIFIC IDENTIFIER

C 5 8800 Greenbelt Road

15 16 — 45

B. COUNTY NAME

Prince George's

46 — 70

C. CITY OR TOWN	D. STATE	E. ZIP CODE	F. COUNTY CODE *(if known)*
C 6 Greenbelt	MD	20771	033
15 16 — 40	41 42	47 — 51	52 — 54

CONTINUED FROM THE FRONT

VII. SIC CODES *(4-digit, in order of priority)*

A. FIRST	B. SECOND
7 9661 *(specify)* Space and Research Technology	7 *(specify)*
C. THIRD	**D. FOURTH**
7 *(specify)*	7 *(specify)*

VIII. OPERATOR INFORMATION

A. NAME: 8 NASA Goddard Space Flight Center

B. Is the name listed in Item VIII-A also the owner? ☑ YES ☐ NO

C. STATUS OF OPERATOR *(Enter the appropriate letter into the answer box; if "Other," specify.)*

F = FEDERAL
S = STATE
P = PRIVATE
M = PUBLIC *(other than federal or state)*
O = OTHER *(specify)*

F *(specify)* Federal Research and Development Facility

D. PHONE *(area code & no.)*: A (301) 286-0509

E. STREET OR P.O. BOX: 8800 Greenbelt Road

F. CITY OR TOWN: B Greenbelt

G. STATE: MD

H. ZIP CODE: 20771

IX. INDIAN LAND

Is the facility located on Indian lands? ☐ YES ☑ NO

X. EXISTING ENVIRONMENTAL PERMITS

A. NPDES *(Discharges to Surface Water)*	9 N 08-DP-3156A	
B. UIC *(Underground Injection of Fluids)*	9 U N/A	
C. RCRA *(Hazardous Wastes)*	9 R N/A	
D. PSD *(Air Emissions from Proposed Sources)*	9 P	
E. OTHER *(specify)*	9 00449	*(specify)* WSSC Discharge Authorization Permit
E. OTHER *(specify)*	9 24-033-00675	*(specify)* Part 70 Operating Permit

E.05-SF-5501 NPDES Phase II
E.2014-OPT-3356 Oil Ops Permit

XI. MAP

Attach to this application a topographic map of the area extending to at least one mile beyond property boundaries. The map must show the outline of the facility, the location of each of its existing and proposed intake and discharge structures, each of its hazardous waste treatment, storage, or disposal facilities, and each well where it injects fluids underground. Include all springs, rivers, and other surface water bodies in the map area. See instructions for precise requirements.

XII. NATURE OF BUSINESS *(provide a brief description)*

Goddard Space Flight Center's (GSFC) mission is to expand knowledge of the Earth and its environment, the solar system, and the universe through the observations from space. This mission is accomplished by performing innovative research in the Earth and space sciences, astronomy, space physics, and tracking and communication. GSFC consists of federally-owned land with extensive office buildings, laboratories, and facilities to support research, design, development, fabrication and testing of spacecraft and science instruments.

XIII. CERTIFICATION *(see instructions)*

I certify under penalty of law that I have personally examined and am familiar with the information submitted in this application and all attachments and that, based on my inquiry of those persons immediately responsible for obtaining the information contained in the application, I believe that the information is true, accurate, and complete. I am aware that there are significant penalties for submitting false information, including the possibility of fine and imprisonment.

A. NAME & OFFICIAL TITLE *(type or print)*	B. SIGNATURE	C. DATE SIGNED
Christopher J. Scolese, Director	C.J. Scolese	5/10/16

COMMENTS FOR OFFICIAL USE ONLY

C

Please print or type in the unshaded areas only.

EPA I.D. NUMBER (*copy from Item 1 of Form 1*)
MD9800013865

Form Approved.
OMB No. 2040-0086.
Approval expires 3-31-98.

FORM 2C NPDES

EPA

U.S. ENVIRONMENTAL PROTECTION AGENCY
APPLICATION FOR PERMIT TO DISCHARGE WASTEWATER
EXISTING MANUFACTURING, COMMERCIAL, MINING AND SILVICULTURE OPERATIONS
Consolidated Permits Program

I. OUTFALL LOCATION

For each outfall, list the latitude and longitude of its location to the nearest 15 seconds and the name of the receiving water.

A. OUTFALL NUMBER (*list*)	B. LATITUDE			C. LONGITUDE			D. RECEIVING WATER (*name*)
	1. DEG.	2. MIN.	3. SEC.	1. DEG.	2. MIN.	3. SEC.	
001	38.00	59.00	45.00	76.00	51.00	15.00	Unnamed tributary to Beaver Creek

II. FLOWS, SOURCES OF POLLUTION, AND TREATMENT TECHNOLOGIES

A. Attach a line drawing showing the water flow through the facility. Indicate sources of intake water, operations contributing wastewater to the effluent, and treatment units labeled to correspond to the more detailed descriptions in Item B. Construct a water balance on the line drawing by showing average flows between intakes, operations, treatment units, and outfalls. If a water balance cannot be determined (*e.g., for certain mining activities*), provide a pictorial description of the nature and amount of any sources of water and any collection or treatment measures.

B. For each outfall, provide a description of: (1) All operations contributing wastewater to the effluent, including process wastewater, sanitary wastewater, cooling water, and storm water runoff; (2) The average flow contributed by each operation; and (3) The treatment received by the wastewater. Continue on additional sheets if necessary.

1. OUTFALL NO. (*list*)	2. OPERATION(S) CONTRIBUTING FLOW		3. TREATMENT		
	a. OPERATION (*list*)	b. AVERAGE FLOW (*include units*)	a. DESCRIPTION	b. LIST CODES FROM TABLE 2C-1	
001	Boiler blowdown	25,061 gpd (12 month avg)	pH neutralization	2-K	
	Non-contact cooling water blowdown	17,306 gpd (12 month avg)	NA		
	Storm water runoff	672,336 gpd (12 month avg)	NA		

CONTINUED FROM THE FRONT

C. Except for storm runoff, leaks, or spills, are any of the discharges described in Items II-A or B intermittent or seasonal?

☑ YES (*complete the following table*) ☐ NO (*go to Section III*)

1. OUTFALL NUMBER (*list*)	2. OPERATION(s) CONTRIBUTING FLOW (*list*)	3. FREQUENCY a. DAYS PER WEEK (*specify average*)	3. FREQUENCY b. MONTHS PER YEAR (*specify average*)	4. FLOW a. FLOW RATE (*in mgd*) 1. LONG TERM AVERAGE	4. FLOW a. FLOW RATE (*in mgd*) 2. MAXIMUM DAILY	4. FLOW B. TOTAL VOLUME (*specify with units*) 1. LONG TERM AVERAGE	4. FLOW B. TOTAL VOLUME (*specify with units*) 2. MAXIMUM DAILY	4. FLOW C. DURATION (*in days*)
001	Boiler blowdown Non-contact cooling water blowdown	7	12	0.042 mgd	0.071 mgd	15.4 million gallons per year	25.9 million gallons per year	365

III. PRODUCTION

A. Does an effluent guideline limitation promulgated by EPA under Section 304 of the Clean Water Act apply to your facility?

☐ YES (*complete Item III-B*) ☑ NO (*go to Section IV*)

B. Are the limitations in the applicable effluent guideline expressed in terms of production (*or other measure of operation*)?

☐ YES (*complete Item III-C*) ☐ NO (*go to Section IV*)

C. If you answered "yes" to Item III-B, list the quantity which represents an actual measurement of your level of production, expressed in the terms and units used in the applicable effluent guideline, and indicate the affected outfalls.

1. AVERAGE DAILY PRODUCTION a. QUANTITY PER DAY	b. UNITS OF MEASURE	c. OPERATION, PRODUCT, MATERIAL, ETC. (*specify*)	2. AFFECTED OUTFALLS (*list outfall numbers*)
NA			

IV. IMPROVEMENTS

A. Are you now required by any Federal, State or local authority to meet any implementation schedule for the construction, upgrading or operations of wastewater treatment equipment or practices or any other environmental programs which may affect the discharges described in this application? This includes, but is not limited to, permit conditions, administrative or enforcement orders, enforcement compliance schedule letters, stipulations, court orders, and grant or loan conditions.

☐ YES (*complete the following table*) ☑ NO (*go to Item IV-B*)

1. IDENTIFICATION OF CONDITION, AGREEMENT, ETC.	2. AFFECTED OUTFALLS a. NO.	2. AFFECTED OUTFALLS b. SOURCE OF DISCHARGE	3. BRIEF DESCRIPTION OF PROJECT	4. FINAL COMPLIANCE DATE a. REQUIRED	4. FINAL COMPLIANCE DATE b. PROJECTED

B. OPTIONAL: You may attach additional sheets describing any additional water pollution control programs (*or other environmental projects which may affect your discharges*) you now have underway or which you plan. Indicate whether each program is now underway or planned, and indicate your actual or planned schedules for construction.

☐ MARK "X" IF DESCRIPTION OF ADDITIONAL CONTROL PROGRAMS IS ATTACHED

CONTINUE ON PAGE 3

EPA I.D. NUMBER (*copy from Item 1 of Form 1*)
MD9800013865

CONTINUED FROM PAGE 2

V. INTAKE AND EFFLUENT CHARACTERISTICS

A, B, & C: See instructions before proceeding – Complete one set of tables for each outfall – Annotate the outfall number in the space provided.
NOTE: Tables V-A, V-B, and V-C are included on separate sheets numbered V-1 through V-9.

D. Use the space below to list any of the pollutants listed in Table 2c-3 of the instructions, which you know or have reason to believe is discharged or may be discharged from any outfall. For every pollutant you list, briefly describe the reasons you believe it to be present and report any analytical data in your possession.

1. POLLUTANT	2. SOURCE	1. POLLUTANT	2. SOURCE
1. Magnesium (Hardness)	1. naturally occuring in pond and stormwater		
2. Total copper	2. incremental corrosion within cooling towers		
3. Chlorine	3. chlorination in cooling tower effluent and potable water discharges		
4. Nitrate-nitrite	4.water treatment additives; naturally occuring in pond		
5. Nitrogen	5. water treatment additives; naturally occuring in pond		
6. Phosphorus	6. water treatment additives; naturally occuring in pond		
* All pollutants are monitored as part of required sampling under our current NPDES permit. Analytical data have been submitted with DMRs.			

VI. POTENTIAL DISCHARGES NOT COVERED BY ANALYSIS

Is any pollutant listed in Item V-C a substance or a component of a substance which you currently use or manufacture as an intermediate or final product or byproduct?

☐ YES (*list all such pollutants below*) ☑ NO (*go to Item VI-B*)

CONTINUE ON REVERSE

CONTINUED FROM THE FRONT

VII. BIOLOGICAL TOXICITY TESTING DATA

Do you have any knowledge or reason to believe that any biological test for acute or chronic toxicity has been made on any of your discharges or on a receiving water in relation to your discharge within the last 3 years?

☐ YES (*identify the test(s) and describe their purposes below*) ☑ NO (*go to Section VIII*)

VIII. CONTRACT ANALYSIS INFORMATION

Were any of the analyses reported in Item V performed by a contract laboratory or consulting firm?

☑ YES (*list the name, address, and telephone number of, and pollutants analyzed by, each such laboratory or firm below*) ☐ NO (*go to Section IX*)

A. NAME	B. ADDRESS	C. TELEPHONE (*area code & no.*)	D. POLLUTANTS ANALYZED (*list*)
Phase Separation Science, Inc.	6630 Baltimore National Pike Baltimore, Maryland 21228	(410) 747-8770	Biochemical Oxygen Demand (BOD) Chemical Oxygen Demand (COD) Total Suspended Solids (TSS) Oil and Grease Ammonia Total Copper Dissolved Copper Hardness Nitrate + Nitrite Total Nitrogen Total Phosphorous

IX. CERTIFICATION

I certify under penalty of law that this document and all attachments were prepared under my direction or supervision in accordance with a system designed to assure that qualified personnel properly gather and evaluate the information submitted. Based on my inquiry of the person or persons who manage the system or those persons directly responsible for gathering the information, the information submitted is, to the best of my knowledge and belief, true, accurate, and complete. I am aware that there are significant penalties for submitting false information, including the possibility of fine and imprisonment for knowing violations.

A. NAME & OFFICIAL TITLE (*type or print*)	B. PHONE NO. (*area code & no.*)
Christopher J. Scolese, Director	
C. SIGNATURE	D. DATE SIGNED
C J Sc	10 May 2016

PLEASE PRINT OR TYPE IN THE UNSHADED AREAS ONLY. You may report some or all of this information on separate sheets (*use the same format*) instead of completing these pages. SEE INSTRUCTIONS.

EPA I.D. NUMBER (*copy from Item 1 of Form 1*): MD9800013865

V. INTAKE AND EFFLUENT CHARACTERISTICS *(continued from page 3 of Form 2-C)*

OUTFALL NO. 001

PART A - You must provide the results of at least one analysis for every pollutant in this table. Complete one table for each outfall. See instructions for additional details.

1. POLLUTANT	2. EFFLUENT a. MAXIMUM DAILY VALUE (1) CONCENTRATION	(2) MASS	b. MAXIMUM 30 DAY VALUE (*if available*) (1) CONCENTRATION	(2) MASS	c. LONG TERM AVRG. VALUE (*if available*) (1) CONCENTRATION	(2) MASS	d. NO. OF ANALYSES	3. UNITS (*specify if blank*) a. CONCEN-TRATION	b. MASS	4. INTAKE (*optional*) a. LONG TERM AVERAGE VALUE (1) CONCENTRATION	(2) MASS	b. NO. OF ANALYSES
a. Biochemical Oxygen Demand (*BOD*)	<5.0	<15,522			NA	NA	1	mg/L	g			
b. Chemical Oxygen Demand (*COD*)	34	105,548			NA	NA	1	mg/L	g			
c. Total Organic Carbon (*TOC*)	18.2	56,499			NA	NA	1	mg/L	g			
d. Total Suspended Solids (*TSS*)	25	77,609			NA	NA	1	mg/L	g			
e. Ammonia (*as N*)	<0.2	<621			NA	NA	1	mg/L	g			
f. Flow (Effluent and Storm water)	VALUE 820,086		VALUE		VALUE 714,705		12	NA	gpd	VALUE		
g. Temperature (*winter*)	VALUE 14.8		VALUE		VALUE 8.2		12	°C		VALUE		
h. Temperature (*summer*)	VALUE 27.2		VALUE		VALUE 22.9		12	°C		VALUE		
i. pH	MINIMUM 6.2	MAXIMUM 8.8	MINIMUM	MAXIMUM			12	STANDARD UNITS				

PART B – Mark "X" in column 2-a for each pollutant you know or have reason to believe is present. Mark "X" in column 2-b for each pollutant you believe to be absent. If you mark column 2a for any pollutant which is limited either directly, or indirectly but expressly, in an effluent limitations guideline, you must provide the results of at least one analysis for that pollutant. For other pollutants for which you mark column 2a, you must provide quantitative data or an explanation of their presence in your discharge. Complete one table for each outfall. See the instructions for additional details and requirements.

1. POLLUTANT AND CAS NO. (*if available*)	2. MARK "X" a. BELIEVED PRESENT	b. BELIEVED ABSENT	3. EFFLUENT a. MAXIMUM DAILY VALUE (1) CONCENTRATION	(2) MASS	b. MAXIMUM 30 DAY VALUE (*if available*) (1) CONCENTRATION	(2) MASS	c. LONG TERM AVRG. VALUE (*if available*) (1) CONCENTRATION	(2) MASS	d. NO. OF ANALYSES	4. UNITS a. CONCEN-TRATION	b. MASS	5. INTAKE (*optional*) a. LONG TERM AVERAGE VALUE (1) CONCENTRATION	(2) MASS	b. NO. OF ANALYSES
a. Bromide (24959-67-9)		X												
b. Chlorine, Total Residual	X		0.05	155			0.02	61	12	mg/L	g			
c. Color		X												
d. Fecal Coliform		X												
e. Fluoride (16984-48-8)		X												
f. Nitrate-Nitrite (*as N*)	X		0.17	528			0.12	318	4	mg/L	g			

CONTINUE ON REVERSE

ITEM V-B CONTINUED FROM FRONT

1. POLLUTANT AND CAS NO. (*if available*)	2. MARK "X"		3. EFFLUENT							4. UNITS		5. INTAKE (*optional*)		
	a. BELIEVED PRESENT	b. BELIEVED ABSENT	a. MAXIMUM DAILY VALUE		b. MAXIMUM 30 DAY VALUE (*if available*)		c. LONG TERM AVRG. VALUE (*if available*)		d. NO. OF ANALYSES	a. CONCEN-TRATION	b. MASS	a. LONG TERM AVERAGE VALUE		b. NO. OF ANALYSES
			(1) CONCENTRATION	(2) MASS	(1) CONCENTRATION	(2) MASS	(1) CONCENTRATION	(2) MASS				(1) CONCENTRATION	(2) MASS	
g. Nitrogen, Total Organic (*as N*)	X		2.2	6,830			1.5	4,173	4	mg/L	g			
h. Oil and Grease		X	<2.0	<6,209			NA	NA	1	mg/L	g			
i. Phosphorus (as P), Total (7723-14-0)	X		0.5	1,645			0.3	832	4	mg/L	g			
j. Radioactivity														
(1) Alpha, Total		X												
(2) Beta, Total		X												
(3) Radium, Total		X												
(4) Radium 226, Total		X												
k. Sulfate (*as SO_4*) (14808-79-8)		X												
l. Sulfide (*as S*)		X												
m. Sulfite (*as SO_3*) (14265-45-3)		X												
n. Surfactants		X												
o. Aluminum, Total (7429-90-5)		X												
p. Barium, Total (7440-39-3)		X												
q. Boron, Total (7440-42-8)		X												
r. Cobalt, Total (7440-48-4)		X												
s. Iron, Total (7439-89-6)		X												
t. Magnesium, Total (7439-95-4)	X		16.0	49,670			7.14	19,332	11	mg/L	g			
u. Molybdenum, Total (7439-98-7)		X												
v. Manganese, Total (7439-96-5)		X												
w. Tin, Total (7440-31-5)		X												
x. Titanium, Total (7440-32-6)		X												

CONTINUE ON PAGE V-3

EPA I.D. NUMBER (*copy from Item 1 of Form 1*)	OUTFALL NUMBER
MD9800013865	001

CONTINUED FROM PAGE 3 OF FORM 2-C

PART C - If you are a primary industry and this outfall contains process wastewater, refer to Table 2c-2 in the instructions to determine which of the GC/MS fractions you must test for. Mark "X" in column 2-a for all such GC/MS fractions that apply to your industry and for ALL toxic metals, cyanides, and total phenols. If you are not required to mark column 2-a (*secondary industries, nonprocess wastewater outfalls, and nonrequired GC/MS fractions*), mark "X" in column 2-b for each pollutant you know or have reason to believe is present. Mark "X" in column 2-c for each pollutant you believe is absent. If you mark column 2a for any pollutant, you must provide the results of at least one analysis for that pollutant. If you mark column 2b for any pollutant, you must provide the results of at least one analysis for that pollutant if you know or have reason to believe it will be discharged in concentrations of 10 ppb or greater. If you mark column 2b for acrolein, acrylonitrile, 2,4 dinitrophenol, or 2-methyl-4, 6 dinitrophenol, you must provide the results of at least one analysis for each of these pollutants which you know or have reason to believe that you discharge in concentrations of 100 ppb or greater. Otherwise, for pollutants for which you mark column 2b, you must either submit at least one analysis or briefly describe the reasons the pollutant is expected to be discharged. Note that there are 7 pages to this part; please review each carefully. Complete one table (*all 7 pages*) for each outfall. See instructions for additional details and requirements.

1. POLLUTANT AND CAS NUMBER (*if available*)	2. MARK "X"			3. EFFLUENT							4. UNITS		5. INTAKE (*optional*)		
	a. TESTING REQUIRED	b. BELIEVED PRESENT	c. BELIEVED ABSENT	a. MAXIMUM DAILY VALUE		b. MAXIMUM 30 DAY VALUE (*if available*)		c. LONG TERM AVRG. VALUE (*if available*)		d. NO. OF ANALYSES	a. CONCEN-TRATION	b. MASS	a. LONG TERM AVERAGE VALUE		b. NO. OF ANALYSES
				(1) CONCENTRATION	(2) MASS	(1) CONCENTRATION	(2) MASS	(1) CONCENTRATION	(2) MASS				(1) CONCENTRATION	(2) MASS	
METALS, CYANIDE, AND TOTAL PHENOLS															
1M. Antimony, Total (7440-36-0)			X												
2M. Arsenic, Total (7440-38-2)			X												
3M. Beryllium, Total (7440-41-7)			X												
4M. Cadmium, Total (7440-43-9)			X												
5M. Chromium, Total (7440-47-3)			X												
6M. Copper, Total (7440-50-8)		X		18.6	57			8.4	23	13	ug/L	g			
7M. Lead, Total (7439-92-1)			X												
8M. Mercury, Total (7439-97-6)			X												
9M. Nickel, Total (7440-02-0)			X												
10M. Selenium, Total (7782-49-2)			X												
11M. Silver, Total (7440-22-4)			X												
12M. Thallium, Total (7440-28-0)			X												
13M. Zinc, Total (7440-66-6)			X												
14M. Cyanide, Total (57-12-5)			X												
15M. Phenols, Total			X												
DIOXIN															
2,3,7,8-Tetra-chlorodibenzo-P-Dioxin (1764-01-6)			X	DESCRIBE RESULTS											

CONTINUE ON REVERSE

CONTINUED FROM THE FRONT

1. POLLUTANT AND CAS NUMBER (*if available*)	2. MARK "X"			3. EFFLUENT							4. UNITS		5. INTAKE (*optional*)		
	a. TESTING REQUIRED	b. BELIEVED PRESENT	c. BELIEVED ABSENT	a. MAXIMUM DAILY VALUE		b. MAXIMUM 30 DAY VALUE (*if available*)		c. LONG TERM AVRG. VALUE (*if available*)		d. NO. OF ANALYSES	a. CONCEN-TRATION	b. MASS	a. LONG TERM AVERAGE VALUE		b. NO. OF ANALYSES
				(1) CONCENTRATION	(2) MASS	(1) CONCENTRATION	(2) MASS	(1) CONCENTRATION	(2) MASS				(1) CONCENTRATION	(2) MASS	
GC/MS FRACTION -- VOLATILE COMPOUNDS															
1V. Acrolein (107-02-8)			X												
2V. Acrylonitrile (107-13-1)			X												
3V. Benzene (71-43-2)			X												
4V. Bis (*Chloromethyl*) Ether (542-88-1)			X												
5V. Bromoform (75-25-2)			X												
6V. Carbon Tetrachloride (56-23-5)			X												
7V. Chlorobenzene (108-90-7)			X												
8V. Chlorodibromomethane (124-48-1)			X												
9V. Chloroethane (75-00-3)			X												
10V. 2-Chloroethylvinyl Ether (110-75-8)			X												
11V. Chloroform (67-66-3)			X												
12V. Dichlorobromomethane (75-27-4)			X												
13V. Dichlorodifluoromethane (75-71-8)			X												
14V. 1,1-Dichloroethane (75-34-3)			X												
15V. 1,2-Dichloroethane (107-06-2)			X												
16V. 1,1-Dichloroethylene (75-35-4)			X												
17V. 1,2-Dichloropropane (78-87-5)			X												
18V. 1,3-Dichloropropylene (542-75-6)			X												
19V. Ethylbenzene (100-41-4)			X												
20V. Methyl Bromide (74-83-9)			X												
21V. Methyl Chloride (74-87-3)			X												

CONTINUE ON PAGE V-5

CONTINUED FROM PAGE V-4

1. POLLUTANT AND CAS NUMBER (*if available*)	2. MARK "X"			3. EFFLUENT							4. UNITS		5. INTAKE (*optional*)		
	a. TESTING REQUIRED	b. BELIEVED PRESENT	c. BELIEVED ABSENT	a. MAXIMUM DAILY VALUE		b. MAXIMUM 30 DAY VALUE (*if available*)		c. LONG TERM AVRG. VALUE (*if available*)		d. NO. OF ANALYSES	a. CONCEN-TRATION	b. MASS	a. LONG TERM AVERAGE VALUE		b. NO. OF ANALYSES
				(1) CONCENTRATION	(2) MASS	(1) CONCENTRATION	(2) MASS	(1) CONCENTRATION	(2) MASS				(1) CONCENTRATION	(2) MASS	
GC/MS FRACTION – VOLATILE COMPOUNDS (*continued*)															
22V. Methylene Chloride (75-09-2)			X												
23V. 1,1,2,2-Tetrachloroethane (79-34-5)			X												
24V. Tetrachloro-ethylene (127-18-4)			X												
25V. Toluene (108-88-3)			X												
26V. 1,2-Trans-Dichloroethylene (156-60-5)			X												
27V. 1,1,1-Trichloro-ethane (71-55-6)			X												
28V. 1,1,2-Trichloro-ethane (79-00-5)			X												
29V Trichloro-ethylene (79-01-6)			X												
30V. Trichloro-fluoromethane (75-69-4)			X												
31V. Vinyl Chloride (75-01-4)			X												
GC/MS FRACTION – ACID COMPOUNDS															
1A. 2-Chlorophenol (95-57-8)			X												
2A. 2,4-Dichloro-phenol (120-83-2)			X												
3A. 2,4-Dimethyl-phenol (105-67-9)			X												
4A. 4,6-Dinitro-O-Cresol (534-52-1)			X												
5A. 2,4-Dinitro-phenol (51-28-5)			X												
6A. 2-Nitrophenol (88-75-5)			X												
7A. 4-Nitrophenol (100-02-7)			X												
8A. P-Chloro-M-Cresol (59-50-7)			X												
9A. Pentachloro-phenol (87-86-5)			X												
10A. Phenol (108-95-2)			X												
11A. 2,4,6-Trichloro-phenol (88-05-2)			X												

CONTINUE ON REVERSE

CONTINUED FROM THE FRONT

1. POLLUTANT AND CAS NUMBER (*if available*)	2. MARK "X"			3. EFFLUENT							4. UNITS		5. INTAKE (*optional*)		
	a. TESTING REQUIRED	b. BELIEVED PRESENT	c. BELIEVED ABSENT	a. MAXIMUM DAILY VALUE		b. MAXIMUM 30 DAY VALUE (*if available*)		c. LONG TERM AVRG. VALUE (*if available*)		d. NO. OF ANALYSES	a. CONCEN-TRATION	b. MASS	a. LONG TERM AVERAGE VALUE		b. NO. OF ANALYSES
				(1) CONCENTRATION	(2) MASS	(1) CONCENTRATION	(2) MASS	(1) CONCENTRATION	(2) MASS				(1) CONCENTRATION	(2) MASS	
GC/MS FRACTION – BASE/NEUTRAL COMPOUNDS															
1B. Acenaphthene (83-32-9)			X												
2B. Acenaphtylene (208-96-8)			X												
3B. Anthracene (120-12-7)			X												
4B. Benzidine (92-87-5)			X												
5B. Benzo (*a*) Anthracene (56-55-3)			X												
6B. Benzo (*a*) Pyrene (50-32-8)			X												
7B. 3,4-Benzo-fluoranthene (205-99-2)			X												
8B. Benzo (*ghi*) Perylene (191-24-2)			X												
9B. Benzo (*k*) Fluoranthene (207-08-9)			X												
10B. Bis (*2-Chloro-ethoxy*) Methane (111-91-1)			X												
11B. Bis (*2-Chloro-ethyl*) Ether (111-44-4)			X												
12B. Bis (*2-Chloroisopropyl*) Ether (102-80-1)			X												
13B. Bis (*2-Ethyl-hexyl*) Phthalate (117-81-7)			X												
14B. 4-Bromophenyl Phenyl Ether (101-55-3)			X												
15B. Butyl Benzyl Phthalate (85-68-7)			X												
16B. 2-Chloro-naphthalene (91-58-7)			X												
17B. 4-Chloro-phenyl Phenyl Ether (7005-72-3)			X												
18B. Chrysene (218-01-9)			X												
19B. Dibenzo (*a,h*) Anthracene (53-70-3)			X												
20B. 1,2-Dichloro-benzene (95-50-1)			X												
21B. 1,3-Di-chloro-benzene (541-73-1)			X												

CONTINUE ON PAGE V-7

CONTINUED FROM PAGE V-6

1. POLLUTANT AND CAS NUMBER (*if available*)	2. MARK "X"			3. EFFLUENT							4. UNITS		5. INTAKE (*optional*)		
	a. TESTING REQUIRED	b. BELIEVED PRESENT	c. BELIEVED ABSENT	a. MAXIMUM DAILY VALUE		b. MAXIMUM 30 DAY VALUE (*if available*)		c. LONG TERM AVRG. VALUE (*if available*)		d. NO. OF ANALYSES	a. CONCEN-TRATION	b. MASS	a. LONG TERM AVERAGE VALUE		b. NO. OF ANALYSES
				(1) CONCENTRATION	(2) MASS	(1) CONCENTRATION	(2) MASS	(1) CONCENTRATION	(2) MASS				(1) CONCENTRATION	(2) MASS	
GC/MS FRACTION – BASE/NEUTRAL COMPOUNDS (*continued*)															
22B. 1,4-Dichloro-benzene (106-46-7)			X												
23B. 3,3-Dichloro-benzidine (91-94-1)			X												
24B. Diethyl Phthalate (84-66-2)			X												
25B. Dimethyl Phthalate (131 -11-3)			X												
26B. Di-N-Butyl Phthalate (84-74-2)			X												
27B. 2,4-Dinitro-toluene (121-14-2)			X												
28B. 2,6-Dinitro-toluene (606-20-2)			X												
29B. Di-N-Octyl Phthalate (117-84-0)			X												
30B. 1,2-Diphenyl-hydrazine (*as Azo-benzene*) (122-66-7)			X												
31B. Fluoranthene (206-44-0)			X												
32B. Fluorene (86-73-7)			X												
33B. Hexachloro-benzene (118-74-1)			X												
34B. Hexachloro-butadiene (87-68-3)			X												
35B. Hexachloro-cyclopentadiene (77-47-4)			X												
36B Hexachloro-ethane (67-72-1)			X												
37B. Indeno (*1,2,3-cd*) Pyrene (193-39-5)			X												
38B. Isophorone (78-59-1)			X												
39B. Naphthalene (91-20-3)			X												
40B. Nitrobenzene (98-95-3)			X												
41B. N-Nitro-sodimethylamine (62-75-9)			X												
42B. N-Nitrosodi-N-Propylamine (621-64-7)			X												

CONTINUE ON REVERSE

CONTINUED FROM THE FRONT

1. POLLUTANT AND CAS NUMBER (*if available*)	2. MARK "X"			3. EFFLUENT							4. UNITS		5. INTAKE (*optional*)		
	a. TESTING REQUIRED	b. BELIEVED PRESENT	c. BELIEVED ABSENT	a. MAXIMUM DAILY VALUE		b. MAXIMUM 30 DAY VALUE (*if available*)		c. LONG TERM AVRG. VALUE (*if available*)		d. NO. OF ANALYSES	a. CONCEN-TRATION	b. MASS	a. LONG TERM AVERAGE VALUE		b. NO. OF ANALYSES
				(1) CONCENTRATION	(2) MASS	(1) CONCENTRATION	(2) MASS	(1) CONCENTRATION	(2) MASS				(1) CONCENTRATION	(2) MASS	
GC/MS FRACTION – BASE/NEUTRAL COMPOUNDS (*continued*)															
43B. N-Nitro-sodiphenylamine (86-30-6)			X												
44B. Phenanthrene (85-01-8)			X												
45B. Pyrene (129-00-0)			X												
46B. 1,2,4-Tri-chlorobenzene (120-82-1)			X												
GC/MS FRACTION – PESTICIDES															
1P. Aldrin (309-00-2)			X												
2P. α-BHC (319-84-6)			X												
3P. β-BHC (319-85-7)			X												
4P. γ-BHC (58-89-9)			X												
5P. δ-BHC (319-86-8)			X												
6P. Chlordane (57-74-9)			X												
7P. 4,4'-DDT (50-29-3)			X												
8P. 4,4'-DDE (72-55-9)			X												
9P. 4,4'-DDD (72-54-8)			X												
10P. Dieldrin (60-57-1)			X												
11P. α-Endosulfan (115-29-7)			X												
12P. β-Endosulfan (115-29-7)			X												
13P. Endosulfan Sulfate (1031-07-8)			X												
14P. Endrin (72-20-8)			X												
15P. Endrin Aldehyde (7421-93-4)			X												
16P. Heptachlor (76-44-8)			X												

CONTINUE ON PAGE V-9

EPA I.D. NUMBER (*copy from Item 1 of Form 1*)	OUTFALL NUMBER
MD9800013865	001

CONTINUED FROM PAGE V-8

1. POLLUTANT AND CAS NUMBER (*if available*)	2. MARK "X"			3. EFFLUENT							4. UNITS		5. INTAKE (*optional*)		
	a. TESTING REQUIRED	b. BELIEVED PRESENT	c. BELIEVED ABSENT	a. MAXIMUM DAILY VALUE		b. MAXIMUM 30 DAY VALUE (*if available*)		c. LONG TERM AVRG. VALUE (*if available*)		d. NO. OF ANALYSES	a. CONCEN-TRATION	b. MASS	a. LONG TERM AVERAGE VALUE		b. NO. OF ANALYSES
				(1) CONCENTRATION	(2) MASS	(1) CONCENTRATION	(2) MASS	(1) CONCENTRATION	(2) MASS				(1) CONCENTRATION	(2) MASS	
GC/MS FRACTION – PESTICIDES (*continued*)															
17P. Heptachlor Epoxide (1024-57-3)			X												
18P. PCB-1242 (53469-21-9)			X												
19P. PCB-1254 (11097-69-1)			X												
20P. PCB-1221 (11104-28-2)			X												
21P. PCB-1232 (11141-16-5)			X												
22P. PCB-1248 (12672-29-6)			X												
23P. PCB-1260 (11096-82-5)			X												
24P. PCB-1016 (12674-11-2)			X												
25P. Toxaphene (8001-35-2)			X												

Please type or print in the unshaded areas only	EPA ID Number *(Copy from Item 1 of Form 1)* **MD9800013865**	*Form Approved* *OMB No. 2040-0086* *Approval expires 7-31-88*

Form **2E** NPDES

EPA

Facilities Which Do Not Discharge Process Wastewater

I. Receiving Water

For this outfall, list the latitude and longitude, and name of the receiving water(s)

Outfall Number *(list)*	Latitude			Longitude			Receiving Water *(name)*
	Deg	Min	Sec	Deg	Min	Sec	
004	***38***	***59***	***45***	***76***	***50***	***30***	***Unnamed Tributary to Bald Hill Branch***

II. Discharge Date *(If a new discharger, the date you expect to begin discharging)*

Not Applicable

III. Type of Waste

A. Check the box(es) indicating the general type(s) of wastes discharged.

☐ Sanitary Wastes ☐ Restaurant or Cafeteria Wastes ☒ Noncontact Cooling Water ☐ Other Nonprocess Wastewater *(Identify)*

B. If any cooling water additives are used, list them here. Briefly describe their composition if this information is available.

Outfall 004 includes discharge of non-contact cooling water from the GSFC East Campus Chiller Plant (building 31). Please refer to the attached NPDES Chemical Summary Table for a complete list of water treatment additives and application rates for the GSFC cooling towers. All Safety Data Sheets (SDS/MSDS) have been submitted to the Department previously.

IV. Effluent Characteristics

A. **Existing Sources** - Provide measurements for the parameters listed in the left-hand column below, unless waived by the permitting authority *(see instructions)*.

B. **New Dischargers** - Provide estimates for the parameters listed in the left-hand column below, unless waived by the permitting authority. Instead of the number of measurements taken, provide the source of estimated values *(see instructions)*.

Pollutant or Parameter	(1) Maximum Daily Value *(including units)*		(2) Average Daily Value *(last year)* *(include units)*		(3) Number of Measurements Taken *(last year)*	(or) (4) Source of Estimate *(if new discharger)*
	Mass	Concentration	Mass	Concentration		
Biochemical Oxygen Demand (BOD)	***<2,604 g***	***<5.0 mg/L***	***NA***	***NA***	***1***	***NA***
Total Suspended Solids (TSS)	***4,166 g***	***8.0 mg/L***	***NA***	***NA***	***1***	***NA***
Fecal Coliform *(if believed present or if sanitary waste is discharged)*	***NA***	***NA***	***NA***	***NA***	***0***	***NA***
Total Residual Chlorine *(if chlorine is used)*	***31 g***	***0.06 mg/L***	***13 g***	***0.03 mg/L***	***11***	***NA***
Oil and Grease	***<1,042 g***	***<2.0 mg/L***	***NA***	***NA***	***1***	***NA***
*Chemical oxygen demand (COD)	***16,665 g***	***32 mg/L***	***NA***	***NA***	***1***	***NA***
*Total organic carbon (TOC)	***5,468 g***	***10.5 mg/L***	***NA***	***NA***	***1***	***NA***
Ammonia *(as N)*	***156 g***	***0.3 mg/L***	***NA***	***NA***	***1***	***NA***
Discharge Flow	Value ***137,574 gpd***		***122,754 gpd***		***11***	***NA***
pH *(give range)*	Value ***6.7 - 8.6***		***7.4***		***11***	***NA***
Temperature *(Winter)*	***15.6*** °C		***7.6*** °C		***11***	***NA***
Temperature *(Summer)*	***26.8*** °C		***22.7*** °C		***11***	***NA***

*If noncontact cooling water is discharged

V. Expect for leaks or spills, will the discharge described in this form be intermittent or seasonal?
If yes, briefly describe the frequency of flow and duration.

☒ Yes ☐ No

The GSFC East Campus Chiller Plant (building 31) cooling towers that discharge effluent to Outfall 004 operate year-round. The volume and frequency of discharge from the cooling towers is dependent on GSFC's cooling needs. The discharge flow to Outfall 004 varies seasonally.

VI. Treatment System *(Describe briefly any treatment system(s) used or to be used)*

N/A

VII. Other Information *(Optional)*

Use the space below to expand upon any of the above questions or to bring to the attention of the reviewer any other information you feel should be considered in establishing permit limitations. Attach additional Sheets, if necessary.

	Max. Daily Value		Avg. Daily Value		No. of Measurements
	mass	conc.	mass	conc.	
Total Copper	6 g	12.0 ug/L	4 g	7.5 ug/L	11
Dissolved Copper	6 g	12.0 ug/L	3 g	5.7 ug/L	11
Hardness	98,947 g	190.0 mg/L	41,905 g	90.2 mg/L	11

VIII. Certification

I certify under penalty of law that this document and all attachments were prepared under my direction or supervision in accordance with a system designated to assure that qualified personnel properly gather and evaluate the information submitted. Based on my inquiry of the person or persons who manage the system, or those persons directly responsible for gathering the information, the information submitted is to the best of my knowledge and belief, true, accurate, and complete. I am aware that there are significant penalties for submitting false information, including the possibility of fine and imprisonment for knowing violations.

A. Name of Official Title	B. Phone No. *(area code & no.)*
Christopher J. Scolese, Director	( )
C. Signature	D. Date Signed
CJS	5/10/16

OVERALL BOILER PROCESS SCHEMATIC

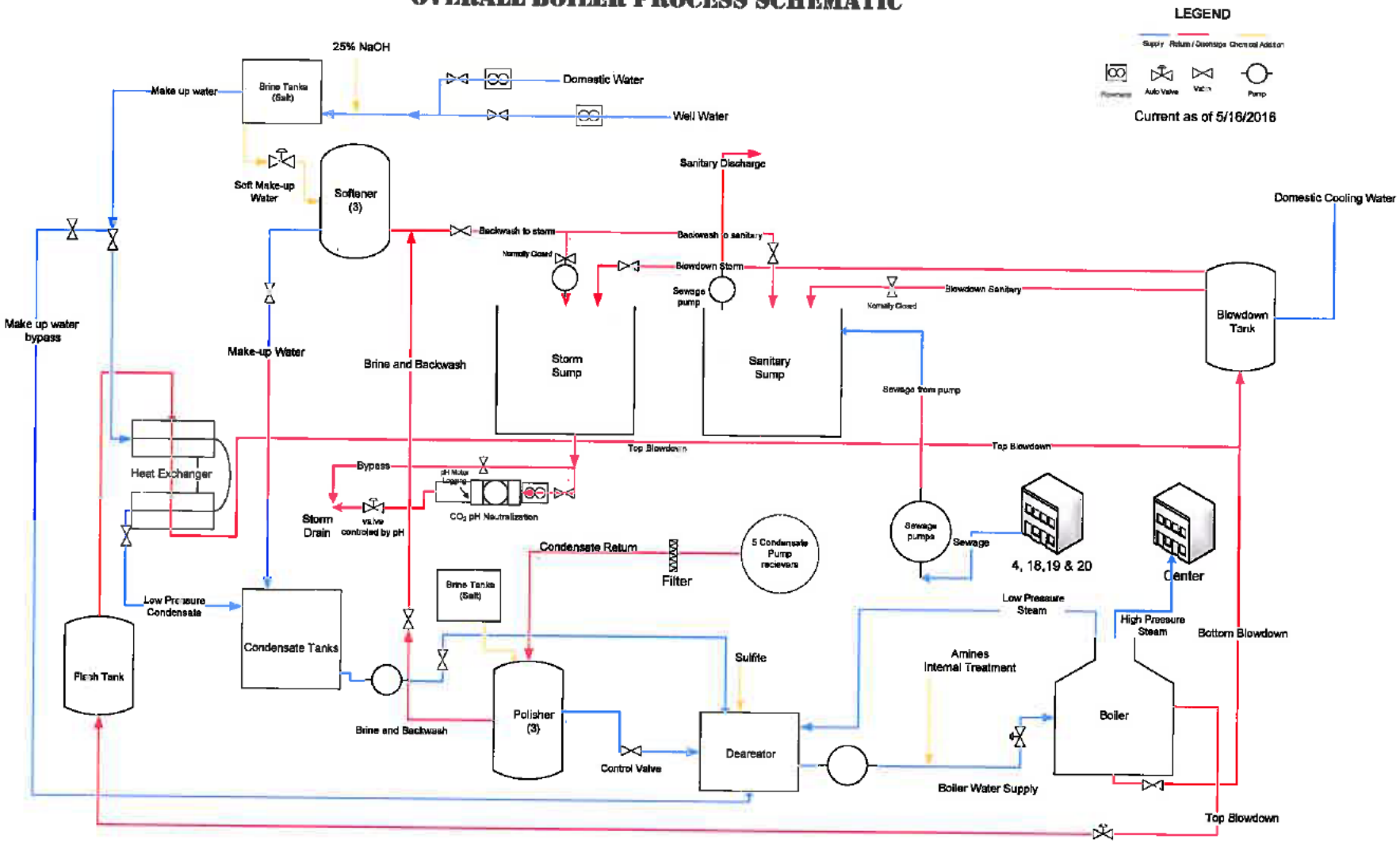

BUILDING 24 COOLING TOWER SCHEMATIC

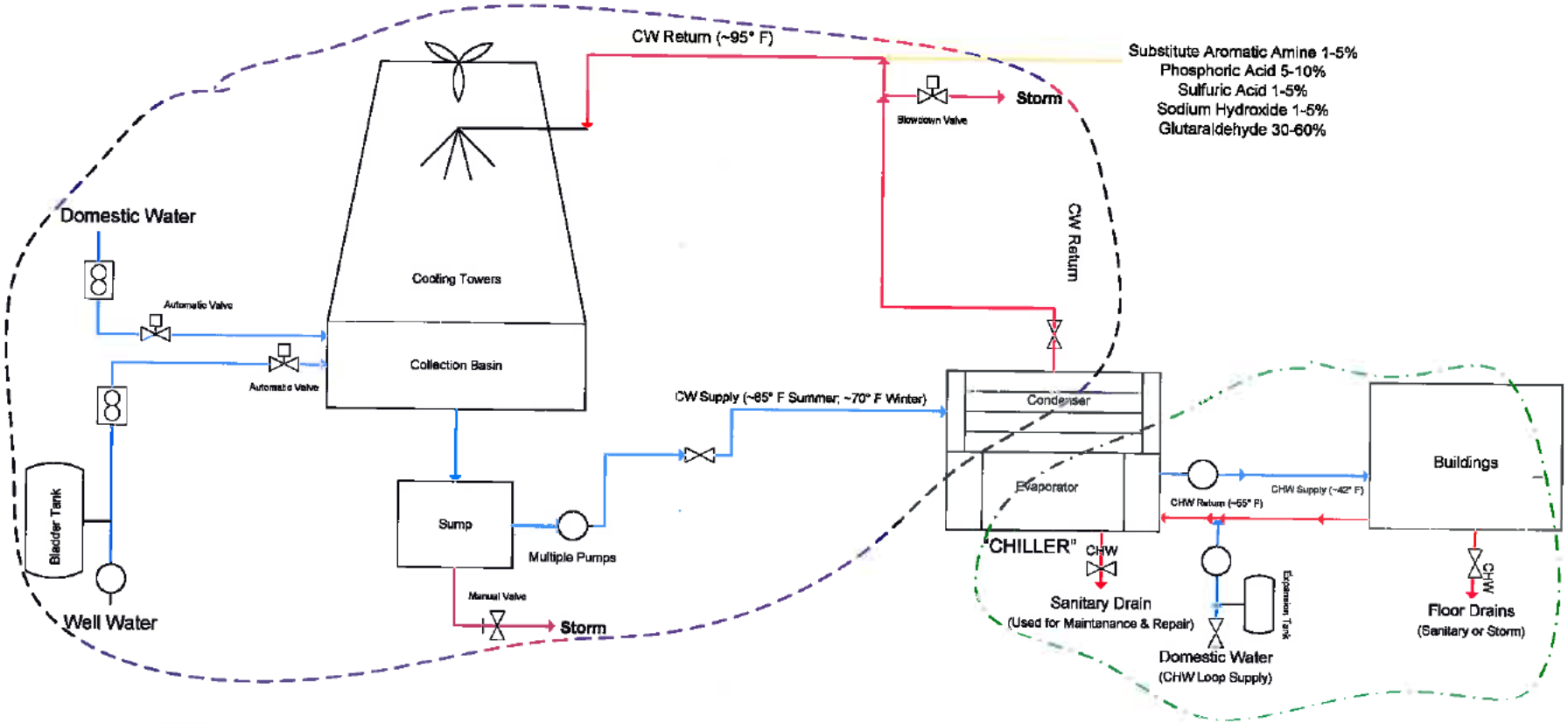

LEGEND

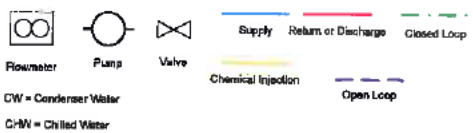

CW = Condenser Water

CHW = Chilled Water

Current as of 4/21/2016

MARYLAND DEPARTMENT OF THE ENVIRONMENT
1800 Washington Blvd. ● Baltimore Maryland 21230
(410) 537-3000 ● 1-800-633-6101 ● http://www.mde.state.md.us

WASTEWATER DISCHARGE PERMIT APPLICATION SUPPLEMENT:
INDUSTRIAL WASTEWATER TREATMENT PLANT CLASSIFICATION

[1] Name of facility: NASA's Goddard Space Flight Center;

[2] Current State Discharge Permit Number (for renewals only): 08-DP-3156A;

[3] What is the current classification of your industrial wastewater treatment system? *Please refer to the attached table (Table 1, Classification Of Industrial Wastewater Treatment Plants) and indicate the numeric classification as described in the table:*

CLASSIFICATION: 2;

[4] What type of treatment system, as referenced in *Table 1*, best describes your wastewater treatment system?

TYPE OF TREATMENT SYSTEM: pH neutralization;

[5] If your industrial wastewater operator or superintendent is certified, what is the classification? (See the certified operator's certificate).

OPERATOR CERTIFICATION: Temporary:Industrial (2, 7) (Certification No. 0315 and 1733);

OR, If you believe that your process is one of the exempted facilities, see the attached table *(Table 2, Facilities Not Required To Have Certified Operators)*, please check the following box:

[ ] *Certified Operator Not Needed*

INDUSTRIAL WASTEWATER TREATMENT PLANT CLASSIFICATION

Table 1

CLASSIFICATION OF INDUSTRIAL WASTEWATER TREATMENT PLANTS

Class of Plants	Type of Treatment Systems	Typical Processes Included in the System
1	Basic Treatment	Petroleum base oil separators, liquid cooling and pH control.
2	Physical Treatment	Sedimentation, screening, pH control and solids removal.
3	Land Treatment	Primary treatment, sedimentation, solids removal, pumping and land treatment.
4	Biological Lagoons	Aerobic or anaerobic waste stabilization lagoons, disinfection and chemical addition.
5	Activated Sludge	Primary treatment, sedimentation, activated sludge and sludge handling.
6	Physical Chemical Treatment	Reduction of chemical and toxic substances including but not limited to cyanide and chromium, acid-alkali neutralization, coagulation and flocculation.
7	Site Specific	Plants not covered under the first six types of treatment yet covered under these regulations.

Table 2

FACILITIES NOT REQUIRED TO HAVE CERTIFIED OPERATORS

Note: Generally speaking, the following categories of facilities are <u>not</u> required by the Code of Maryland Regulations (COMAR) to have certified operators:

- Petroleum storage and distribution facilities
- Seafood processors
- Vehicle washing facilities
- Vehicle maintenance facilities
- Sand and gravel facilities
- Stone quarries
- Industries de-chlorinating supply water as their only treatment
- Industries discharging only storm water runoff
- Industries performing tank or pipe hydrostatic testing

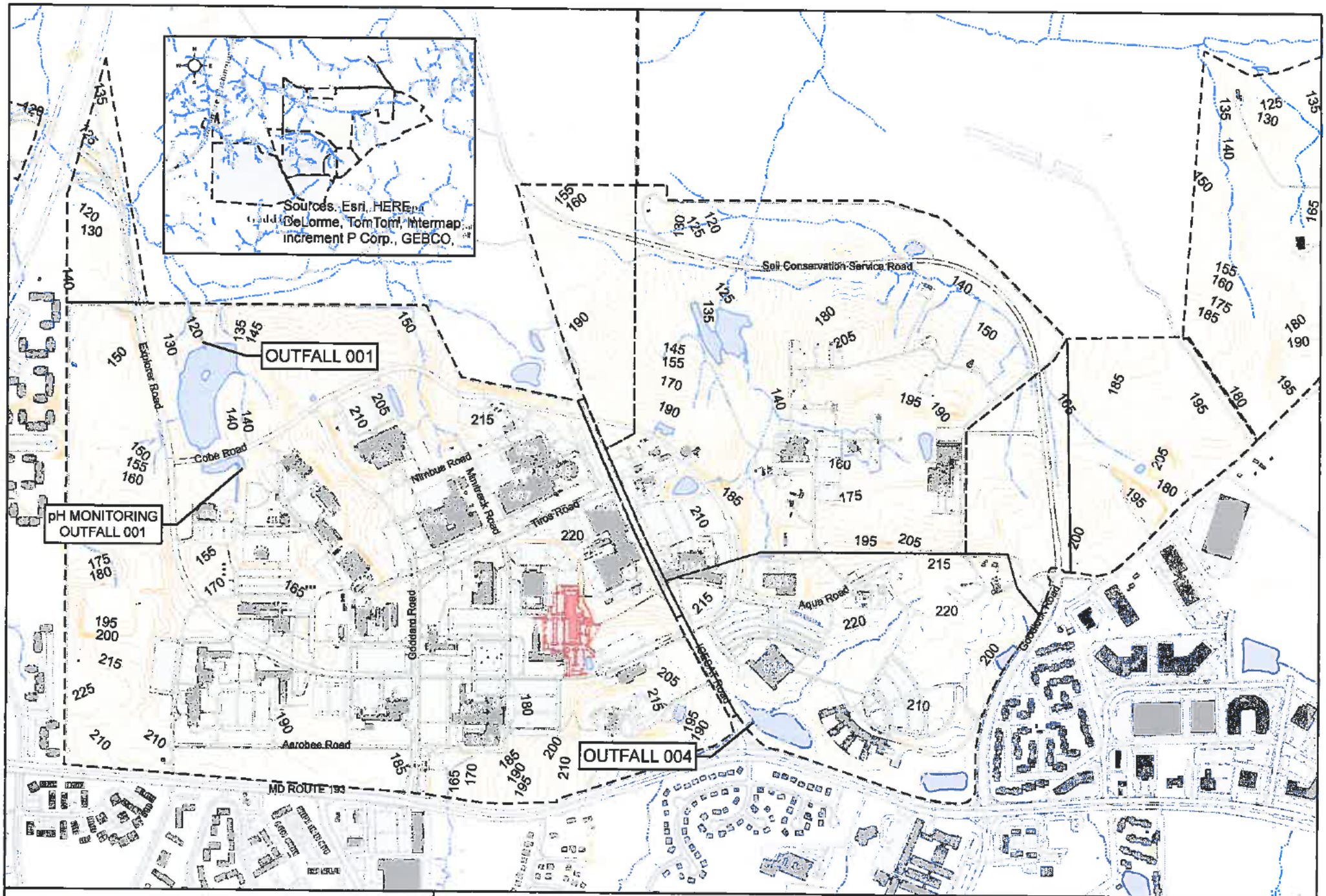

NPDES TOPOGRAPHIC SITE MAP

NASA GODDARD SPACE FLIGHT CENTER
JANUARY 2016

LEGEND:

- NASA PROPERTY BOUNDARY
- IMPERVIOUS SURFACES
- NATURAL WATERBODY
- STREAMS
- BUILDINGS
- FUTURE PROJECTS (BLDG 36)
- NASA PROPERTY BOUNDARY
- ELEVATION CONTOURS

0 300 600 1,200 FEET

N W E S

Executive Summary

Title:

Renewal application for the Center's National Pollutant Discharge Elimination System (NPDES) industrial discharge permit.

Background:

This package is for the renewal of our National Pollutant Discharge Elimination System (NPDES) industrial discharge permit with the Maryland Department of the Environment (MDE). This permit allows us to discharge process wastewater from the boilers and cooling towers in Buildings 24 and 31 to waters of the State via the storm sewer system. We have two outfalls associated with the discharges from these buildings where the wastewater leaves our property. These outfalls are defined in our permit and where we are required to monitor for certain parameters. Outfall 001, associated with Building 24 on the west side of the campus, is at the far end of the Main Pond. Outfall 004, associated with Building 31 on the east side of the campus, is at the outlet of the Building 32/EOSDIS Pond. We also have a separate monitoring point only for pH for 001. This is at the inlet to the small sediment pond across Cobe Road from the Main Pond. This monitoring point was established separately from Outfall 001 because natural processes occurring in the sediment and Main ponds were dramatically affecting the pH and causing us to have noncompliances. MDE agreed to this new monitoring point, for pH only, in the summer of 2015.

Also of note is the pH neutralization system associated with the boiler process. The wastewater that discharges from the boiler system is typically higher than the levels allowed in the permit (pH 6.5- 8.5), with values as high as pH 10 or even pH 11. The pH neutralization system will not allow water to be discharged until the pH is reduced, typically to values near pH 7.5. In order to operate such a system, MDE requires a certified wastewater treatment operator license. GSFC has certified personnel managing this system and the documents supporting this are included in the package.

Package Contents:

The package contains eight documents:

1. Cover Letter – Brief letter explaining the application package
2. Form 3510-1 – Overall application form for the Center
3. Form 3510-2C – Application form for Outfall 001 (main pond), covering the activities in B24
4. Form 3510-2E – Application form for Outfall 004 (B32 pond), covering the activities in B31
5. Schematic for the Boiler Process (supporting document to 3510-2C)
6. Schematic for the Chillers/Cooling Towers Process (supporting document to 3510-2C)
7. MDE Wastewater Treatment Plant Classification Form – Needed for the pH Neutralization System for the boiler process
8. Topographic map of the Center – Shows the Center and the locations of our NPDES outfalls

The first four documents are those requiring review, while the latter four are supporting documents.

Comments/Questions:

If you have any comments or questions, please contact Ms. Janine Pollack at janine.pollack@nasa.gov or x6-0509.

GSFC Route Sheet

Code	Name	Purpose*	Initials**	Date In	Date Out	Remarks
250	Ed Connell	2	[illegible]	4/22	4/22	
200	Cindy Stoltz	2	[illegible]	4/26	4/27	See comment
200	Dave Reth	2	[illegible]	4/27	4/27	
200	Ray Rubilotta	2	[illegible]	4/27	4/27	
	Code 100		[illegible]	4/28	4/29	

Originator:	Code:	Phone Number:
Janine Pollack	250	6-0509
Typed by:	**Code:**	**Phone Number:**
Janine Pollack	250	6-0509

Quality Check (secretary: please review and initial)
BR: _____ DIV: AH DIR: JB

Mail Log
BR Log: _____ DIV Log: 250-04-16 DIR Log: 036-16-400

Subject:
NPDES (Nat'l Pollutant Discharge Elimination System) Permit Renewal Package

Due Date

Special Instructions:
Due to Maryland Dept of Environment NLT May 31, 2016

*Purpose Legend
1. For information
2. For review/approval/concurrence
3. For necessary action
4. For signature

**INITIALS/DATE: Ensure that all initial and in/out dates are completed for all lines

Code 100 Correspondence Tracking

Code	Name	Purpose*	Initials**	Date In	Date Out	Remarks
100	Nannette Robey	2/3	NR	4/28	4/29	edits
	Directorate:					
	Nannette Robey		NR	4/29	4/29	
	Directorate:					
	Nannette Robey					
100	Joe Poist	2/3	JP		5/9	
100	Nancy Abell	2/3	NA		5/3	
100	George Morrow	2/4	GM	5/10	5/10	
100	Chris Scolese	2/4	@			
100	Nannette Robey	3	NR	5/11	5/11	

Originator: Janine Pollack	Code: 250	Phone Number: 6-0509
Typed by: Janine Pollack	Code: 250	Phone Number: 6-0509
Code 100 Correspondence Tracking Number: 16-100- 0157		
Subject: NPDES (Nat'l Pollutant Discharge Elimination System) Permit Renewal Package		Due Date
Special Instructions: Due to Maryland Department of Environment NLT May 31, 2016		

*Purpose Legend
1. For information
2. For review/approval/concurrence
3. For necessary action
4. For signature

**INITIALS/DATE: Ensure that all initial and in/out dates are completed for all lines

RECEIVED APR 28 2016

Shipping and Mailing Request Form

(For use with express, certified, and registered domestic and international small packages)

074775

SHIP TO: (Please include a complete street address, city, state, zip code, and telephone number)

MDE Water Mgmt Admin.
Compliance Program
1800 Washington Blvd Suite 425
Baltimore, MD 21230-1708

DESCRIPTION OF ITEM BEING SHIPPED/MAILED: (this information is required)

Memo

TYPE OF SERVICE REQUESTED: (Please read options carefully)

Express Delivery Services	Certified and Registered Mail Services
☐ Priority Overnight Service	☐ Certified Mail
☐ Standard Overnight Service	☐ Registered Mail
☑ Second Day Service	☐ Return Receipt
☐ Third Day Service	
☐ International Express Service *	
☐ International Economy Service *	
☐ Saturday Delivery	
☐ Least Costly Method	

*** The following information must be provided for all packages being shipped or mailed to an international destination.**

To the best of my knowledge, this shipment is not restricted for export. If you are unsure of current ITAR (22 CFR Parts 120-130) and export (15 CFR Parts 730-774) regulations, please contact the GSFC Export Control Office at 6-6388/6-4579 or visit their website at http://export.gsfc.nasa.gov

Signature and Date of Sender

International packages going to a "Designated Country" must be approved by the International Coordinator's Office, Code 101, ext. 6-8300. A list of Designated Countries can be found at http://export.gsfc.nasa.gov

Signature and Date of International Coordinator's Office representative

ORIGINATOR: **I certify that services requested are for NASA Official Business Only**

Name: Janine Pollack	Code: 250	Telephone: 301 286-0509	Date:

For Internal Use Only:

638632782663		
Package Identification Number	Mode of Shipment	Date Processed

GSFC 11-54 (9/07) Previous editions are obsolete

July 12,2016

Dear Customer:

The following is the proof-of-delivery for tracking number **638632782663**.

Delivery Information:

Status:	Delivered	**Delivered to:**	Shipping/Receiving
Signed for by:	G.SABASA	**Delivery date:**	May 25, 2016 09:37
Service type:	FedEx 2Day		
Special Handling:	Deliver Weekday		

Signature image is available. In order to view image and detailed information, the shipper or payor account number of the shipment must be provided.

Shipping Information:

Tracking number:	638632782663	**Ship date:**	May 24, 2016
Recipient:		**Shipper:**	

Thank you for choosing FedEx.