MILITARY HANDBOOK

MAINTAINABILITY PREDICTION

TO ALL HOLDERS OF MIL-HDBK-472:

1. THE FOLLOWING PAGES OF MIL-HDBK-472 HAVE BEEN REVISED AND SUPERSEDE THE PAGES LISTED:

NEW PAGE	DATE	SUPERSEDED PAGE	DATE
iii	12 Jan 1984	iii	24 May 1966
iv	24 May 1966	(REPRINTED WITHOUT CHANGE)	
vii	12 Jan 1984	vii	24 May 1966
viii	12 Jan 1984	viii	24 May 1966
ix	12 Jan 1984	ix	24 May 1966
1	12 Jan 1984	1	24 May 1966
2	12 Jan 1984	2	24 May 1966
3	24 May 1966	(REPRINTED WITHOUT CHANGE)	
4	12 Jan 1984	4	24 May 1966
6-1	12 Jan 1984	5-1	24 May 1966

2. THE FOLLOWING PAGES ARE TO BE ADDED:

PAGE	DATE
x	12 Jan 1984
xi	12 Jan 1984
xii	12 Jan 1984
xiii	12 Jan 1984
xiv	12 Jan 1984
5	12 Jan 1984
V-1 thru V-33	12 Jan 1984
A-V-1 thru A-V-22	12 Jan 1984
B-V-1 thru B-V-27	12 Jan 1984
C-V-1 thru C-V-8	12 Jan 1984
D-V-1 thru D-V-9	12 Jan 1984

3. RETAIN THIS NOTICE AND INSERT BEFORE TABLE OF CONTENTS.

4. Holders of MIL-HDBK-472 will verify that page changes and additions indicated herein have been entered. This notice will be retained as a check sheet. This issuance, together with appended pages, is a separate publication. Each notice is to be retained by stocking points until the Military Handbook is completely revised or cancelled.

Copyright Naval Air Systems Command
Provided by IHS
No reproduction or networking permitted without license from IHS

MNTY 7002
Licensee=NASA Technical Standards 4/9972545004, User=Aziz, Syed
Not for Resale, 05/31/2015 16:29:48 MDT

MIL-HDBK-472
NOTICE 1

Custodians:
Army - MI
Navy - AS
Air Force - 17

Review activities:
Army -
Navy - EC, OS, SH
Air Force - 11, 13, 14

Preparing activity:
Navy - AS
(Project MNTY-7902)

Copyright Naval Air Systems Command
Provided by IHS
No reproduction or networking permitted without license from IHS

Licensee=NASA Technical Standards 4/9972545004, User=Aziz, Syed
Not for Resale, 05/31/2015 16:29:48 MDT

Prediction facilitates an early assessment of the maturity of the maintainability design and enables decisions concerning the compatibility of a proposed design with specified requirements or the choice of better alternatives.

The maintainability prediction procedures I and III are applicable solely to electronic systems and equipments. Procedures II and IV can be used for all systems and equipments. In applying procedure II to non-electronic equipments the appropriate task times must be estimated. Procedure V can be used to predict maintainability parameters of avionics, ground and shipboard electronics at the organizational, intermediate and depot levels of maintenance.

In conclusion, the use of this handbook facilitates the design, development, and production of equipment and systems requiring a high order of maintainability.

Copyright Naval Air Systems Command
Provided by IHS
No reproduction or networking permitted without license from IHS

Licensee=NASA Technical Standards 4/9972545004, User=Aziz, Syed
Not for Resale, 05/31/2015 16:29:48 MDT

TABLE OF CONTENTS

	Page
INTRODUCTION	
The Need for Maintainability Prediction	1
Definition of Maintainability	1
Basic Assumptions and Interpretations	2
Elements of Maintainability Prediction Techniques	2
Summary	3
MAINTAINABILITY PREDICTION PROCEDURES	
PROCEDURE I	1-1
SECTION 1.0 GENERAL	1-1
1.1 Philosophy, Assumptions and Summary	1-1
1.2 Applicability	1-2
1.3 Point of Application	1-2
1.4 Basic Parameters of Measure	1-2
1.5 Information Required	1-2
1.6 Data Basis	1-3
1.7 Correlation Between Predicted and Observed Values	1-4
SECTION 2.0 ANALYTIC FOUNDATION	1-4
2.1 Structure of Time Elements in "Fix" of Malfunction	1-4
2.2 Elemental Activities	1-12
2.2.1 Assumptions Relating to Elemental Activities	1-14
2.2.2 Major Characteristics of Elemental Activities	1-14
2.3 Synthesis of Time Distributions	1-16
2.3.1 Modes for Synthesizing Distributions of Time	1-16
2.3.2 Cumulative Time Distributions and the Monte Carlo Method	1-17
SECTION 3.0 APPLICATION	1-19
3.1 Preliminary Procedure	1-19
3.2 Steps of the Prediction Procedure	1-19

Copyright Naval Air Systems Command
Provided by IHS
No reproduction or networking permitted without license from IHS

Licensee=NASA Technical Standards 4/9972545004, User=Aziz, Syed
Not for Resale, 05/31/2015 16:29:48 MDT

TABLE OF CONTENTS (Continued)

	Page
3.2 Step-by-Step Procedure for Calculating Task Sample	3-16
3.3 Step-by-Step Procedure for Performing Task Prediction	3-18
3.4 Calculation of Maintenance Indices	3-30
ADDENDUM A DESIGN CHECK LISTS AND SCORING CRITERIA	A3-33
CHECK LIST A - SCORING PHYSICAL DESIGN FACTORS	A3-33
CHECK LIST B - SCORING DESIGN DICTATES-FACILITIES	A3-47
CHECK LIST C - SCORING DESIGN DICTATES-MAINTENANCE SKILLS	A3-52
PROCEDURE IV	4-1
SECTION 1.0 GENERAL	4-1
1.1 Philosophy, Assumptions and Summary	4-1
1.2 Applicability	4-2
1.3 Point of Application	4-2
1.4 Basic Parameters of Measurement	4-2
1.5 Information Required	4-2
1.6 Data Basis	4-3
1.7 Correlation Between Predicted and Observed Values	4-3
SECTION 2.0 ANALYTIC FOUNDATION	4-3
2.1 General	4-3
2.2 Theoretical Considerations	4-7
2.2.1 End Item Identification	4-7
2.2.2 Operational Function	4-7
2.2.3 Corrective Maintenance Action Definition	4-7
2.2.4 Malfunction Detection Analysis	4-8
2.2.5 Preventive Maintenance Task Time Analysis	4-8
2.2.6 Corrective Maintenance Task Time Analysis	4-9
2.2.7 Total Maintenance Task Time Analysis	4-12
SECTION 3.0 APPLICATION	4-14
PROCEDURE V	V-1
SECTION 1. GENERAL	V-1
1.1 Philosophy and Assumptions	V-1
1.2 Point of Application	V-1
1.3 Basic Parameters	V-2
1.4 Information Required	V-2
1.4.1 Method A	V-2
1.4.2 Method B	V-2

Copyright Naval Air Systems Command
Provided by IHS
No reproduction or networking permitted without license from IHS

Licensee=NASA Technical Standards 4/9972545004, User=Aziz, Syed
Not for Resale, 05/31/2015 16:29:48 MDT

TABLE OF CONTENTS (Continued)

		Page
SECTION 2.	REFERENCED DOCUMENTS	V-3
2-1	Issues of documents	V-3
SECTION 3.	BASIC DEFINITIONS AND MODELS	V-3
3.1	MTTR elements	V-3
3.2	Basic models	V-4
3.2.1	Mean time to repair	V-4
3.2.1.1	Mean repair time for the nth RI	V-6
3.2.1.2	Average repair time for the nth RI	V-6
3.2.2	Percent isolation to a single RI	V-6
3.2.3	Percent isolation to a group of RIs.	V-7
3.3	Mean maintenance manhours per repair ($\overline{MMH}$/repair)	V-7
3.3.1	Mean maintenance manhours	V-7
3.4	Mean maintenance manhours per maintenance action ($\overline{MMH}$/MA)	V-8
3.5	False alarm rates	V-9
3.6	Mean maintenance manhours per operating hour ($\overline{MMH}$/OH)	V-10
3.7	Mean maintenance manhours per flight hour ($\overline{MMH}$/FH)	V-10
3.8	Maximum corrective maintenance time for the (Φ) percentile (M_{max} (Φ))	V-10
3.8.1	Approximate M_{max} (Φ)	V-10
3.8.2	Accurate M_{max} (Φ)	V-11
SECTION 4.	APPLICATION	V-11
4.1	Method A, early prediction procedure	V-11
4.1.1	Prediction requirements definition	V-11
4.1.2	Replacement concept definition	V-12
4.1.3	Determination of the prediction parameters	V-12
4.1.4	General prediction model and submodel selection	V-15
4.1.5	MTTR computation	V-15
4.1.5.1	Method of computing S_c and S_i	V-18
4.1.5.1.1	Method 1	V-18
4.1.5.1.2	Method 2	V-19
4.1.5.2	Computation of A, T_D' and T_R'	V-19
4.1.5.3	Determination of MTTR	V-21
4.2	Method B - detailed prediction procedure	V-22
4.2.1	Prediction requirement definition	V-22
4.2.2	Replacement concept definition	V-22
4.2.3	Fault detection and isolation output identification	V-23
4.2.4	FD&I outputs and hardware correlation	V-24
4.2.5	Prepare maintenance flow diagrams	V-26
4.2.6	Time line analysis	V-31
4.2.7	RI and FD&I output correlation	V-32
4.2.8	Compute maintainability parameters	V-33

Copyright Naval Air Systems Command
Provided by IHS
No reproduction or networking permitted without license from IHS

Licensee=NASA Technical Standards 4/9972545004, User=Aziz, Syed
Not for Resale, 05/31/2015 16:29:48 MDT

TABLE OF CONTENTS (Continued)

		Page
APPENDIX A	TIME STANDARDS	A-V-1
APPENDIX B	ESTIMATES OF $M_{max}(\Phi)$ FOR LOGNORMAL REPAIR DISTRIBUTIONS	B-V-1
APPENDIX C	ACCURATE COMPUTER $M_{max}(\Phi)$ ANALYSIS	C-V-1
APPENDIX D	ACCURATE MANUAL $M_{max}(\Phi)$ ANALYSIS	D-V-1
BIBLIOGRAPHY		6-1

Copyright Naval Air Systems Command
Provided by IHS
No reproduction or networking permitted without license from IHS

Licensee=NASA Technical Standards 4/9972545004, User=Aziz, Syed
Not for Resale, 05/31/2015 16:29:48 MDT

LIST OF ILLUSTRATIONS

Table	Table Heading	Page
1-1	List of Categories and Elemental Activities of Active Repair Time	1-13
1-2	Fitted Distributions for Completion Times for Elemental Activities	1-15
1-3	Synthesis of Time Distributions	1-20
1-4	Parameters of Distributions of Elemental Activites	1-24
1-5	Proposed Format for Determining the Cumulative Time Distribution	1-27
1-6	Probability of Completing Elemental Activity of Final Malfunction Test by Designated Time	1-28
1-7	Combining Matrix for Active Repair Time Synthesis	1-30
1-8	Observed Distributions of System Final Test Time and System Logistic Time	1-32
1-9	Combining Matrix for System Down Time Synthesis	1-34
1-10	Occurrence Probability Functions for the Elemental Activities	A1-38
1-11	System Readouts	A1-43
2-1	Average Parts Failures per Part per 10^6 Hours by Part Category	2-18
2-2	Maintenance Task Times	2-20
2-3	Interchange Time	2-23
2-4	Element Times Based on the Work Factor System	2-24
2-5	An Example of the Use of Element Times for Determining Interchange Time	2-25
3-1	Part Class Failure Distribution and Sample Size	3-17
3-2	Task Prediction, R-7801	3-23
3-3	Maintenance Analysis, R-7801/FPS-20	3-24
V-I	MTTR Elements for Prediction Procedure V	V-5
A-V-I	Elemental Maintenance Actions	A-V-2 thru A-V-5
A-V-II	Common Maintenance Tasks	A-V-6
B-V-I	60th, 70th and 80th Percentiles of the Lognormal Distribution for Means and Sigmas from .1 to 2.6	B-V-1 thru B-V-14

Copyright Naval Air Systems Command
Provided by IHS
No reproduction or networking permitted without license from IHS

Licensee=NASA Technical Standards 4/9972545004, User=Aziz, Syed
Not for Resale, 05/31/2015 16:29:48 MDT

LIST OF ILLUSTRATIONS

Table	Table Heading	Page
B-V-II	90th, 95th and 99th Percentiles of the Lognormal Distribution for Means and Sigmas from .1 to 2.6	B-V-15 thru B-V-27
C-V-I	Listing for Computer Program to Compute M_{max} (Φ) When Elemental Maintenance Activities are Normally Distributed	C-V-6
C-V-II	Sample Input/Output Data for M_{max} (Φ) Computer Program	C-V-7
D-V-I	Prediction Example Input Data	D-V-8
D-V-II	Prediction Example Manual Calculation of M_{max} (Φ) (Φ= 0.90)	D-V-9

Copyright Naval Air Systems Command
Provided by IHS
No reproduction or networking permitted without license from IHS

Licensee=NASA Technical Standards 4/9972545004, User=Aziz, Syed
Not for Resale, 05/31/2015 16:29:48 MDT

LIST OF ILLUSTRATIONS

Figure	Figure Heading	Page
A	Comparison Matrix of Maintainability Prediction Procedures	4
1-1	Distribution of Malfunction Active Repair Time for the AN/ASB-4	1-5
1-2	Distribution of System Down Time for the AN/ASB 4	1-6
1-3	Distribution of Malfunction Active Repair Time for the AN/ARC-34	1-7
1-4	Distribution of System Down Time for the AN/ARC-34	1-8
1-5	Distribution of Malfunction Active Repair Time for the MD-1	1-9
1-6	Distribution of System Down Time for the MD-1	1-10
1-7	Structure of Time Elements in "Fix" of Malfunction	1-11
1-8	Distributions of Times Required to Perform Repair Actions	1-18
1-9	Resultants Synthesized from t_a, t_b and t_c	1-13
1-10	Probability of Occurrence of System Logistic Time	1-33
2-1	Functional Level Diagram of a Typical Communications System	2-13
2-2	Worksheet for Final Design Maintainabiliy Prediction	2-16
2-3	Worksheet A	2-32
2-4	Worksheet B	2-33
2-5	Worksheet C	2-34
2-6	Worksheet D	2-35
3-1	Comparison of Population and Sampling Mean Distributions	3-8
3-2	Sample Size Nomograph	3-10
3-3	Maintainability Prediction Form	3-19
3-4	Maintenance Analysis Continuation Sheet	3-20
3-5	Maintenance Diagram AN/GRT-3	3-21
3-6	AN/FPS-20, Transmitting System	3-26
3-7	Amplifier-Mixer, AM-1347/FPS-20	3-27
3-8	Expanded View, Plate Power Supply	3-28
3-9	Plate Supply, Block Diagram	3-29
3-10	Nomograph - Downtime	3-32
4-1	Procedural Flow Block Diagram	4-6
4-2	Related Constraint Matrix	4-14
4-3	End Item/Corrective Maintenance Action Matrix	4-15
4-4	End Item/Preventive Maintenance Action Matrix	4-16
4-5	End Item/Operational Functional Matrix	4-17

Copyright Naval Air Systems Command
Provided by IHS
No reproduction or networking permitted without license from IHS

Licensee=NASA Technical Standards 4/9972545004, User=Aziz, Syed
Not for Resale, 05/31/2015 16:29:48 MDT

LIST OF ILLUSTRATIONS (Continued)

Figure	Figure Heading	Page
V-1	RI Data Analysis Sheet - A	V-13
V-2	RI Data Analysis Sheet - B	V-14
V-3	MTTR Submodels	V-16
V-4	Definitions of MTTR Submodels Terms	V-17
V-5	Matrix for correlating FD&I Features with RIs	V-25
V-6	Fault Isolation Output and RI Correlation Tree	V-27
V-7	Manual Fault Isolation Output and RI Correlation tree (partial)	V-28
V-8	Sample: Maintenance Flow Diagram	V-30
V-9	Example Time Synthesis Analysis	V-31
V-10	Maintenance Correlation Matrix Format	V-32
A-V-1	Standard Screws	A-V-7
A-V-2	Hex or Allen Set Screws	A-V-7
A-V-3	Captive Screws	A-V-8
A-V-4	DZUS Fasteners	A-V-8
A-V-5	Tridair Fastener	A-V-9
A-V-6	Thumbscrews	A-V-9
A-V-7	Machine Screws	A-V-10
A-V-8	Nuts or Bolts	A-V-10
A-V-9	Retaining Rings	A-V-11
A-V-10	Drawhook Latch	A-V-11
A-V-11	Spring Clip Catch	A-V-12
A-V-12	Butterfly Latch	A-V-12
A-V-13	ATR Latch	A-V-12
A-V-14	Lift and Turn Latch	A-V-13
A-V-15	Slide Lock Latch	A-V-13
A-V-16	Terminal Posts Connections	A-V-13
A-V-17	Screw Terminal Connections	A-V-14
A-V-18	Termipoint Connections	A-V-14
A-V-19	Wirewrap Connection	A-V-15
A-V-20	Taperpin Connection	A-V-15
A-V-21	PCB Connections	A-V-15
A-V-22	BNC Connectors	A-V-16
A-V-23	Quick Release Coax Connectors	A-V-16
A-V-24	Friction Locking Connector	A-V-16
A-V-25	Friction Locking Connector with Jackscrew	A-V-17
A-V-26	Threadlocking Connector	A-V-17
A-V-27	Slide Locking Connector	A-V-17

Copyright Naval Air Systems Command
Provided by IHS
No reproduction or networking permitted without license from IHS

Licensee=NASA Technical Standards 4/9972545004, User=Aziz, Syed
Not for Resale, 05/31/2015 16:29:48 MDT

LIST OF ILLUSTRATIONS

Figure	Figure Heading	Page
A-V-28	Dip ICs	A-V-18
A-V-29	Guided CCAs	A-V-18
A-V-30	Guided CCAs With a Tool	A-V-18
A-V-31	Non-Guided CCAs	A-V-19
A-V-32	Modules	A-V-19
A-V-33	Crimp Lugs	A-V-19
A-V-34	Form Leads	A-V-20
A-V-35	Soldering Terminal Posts	A-V-20
A-V-36	Soldering PCB Connections	A-V-20
A-V-37	Desoldering With a Braided Wick	A-V-21
A-V-38	Desoldering Using a Vacuum	A-V-21
A-V-39	Form Flat Pack Leads	A-V-21
A-V-40	Panels, Doors and Covers	A-V-22
A-V-41	Drawers	A-V-22
A-V-42	Display Lamps	A-V-22
C-V-1	Resulting Repair Time Distribution for a Sample System Containing Four (4) Repair Types with Different Normally Distributed Repair Times	C-V-8

Copyright Naval Air Systems Command
Provided by IHS 12 Jan 1984
No reproduction or networking permitted without license from IHS

Licensee=NASA Technical Standards 4/9972545004, User=Aziz, Syed
Not for Resale, 05/31/2015 16:29:48 MDT

INTRODUCTION

MAINTAINABILITY PREDICTION

THE NEED FOR MAINTAINABILITY PREDICTION: The prediction of the expected number of hours that a system or device will be in an inoperative or "down state" while it is undergoing maintenance is of vital importance to the user because of the adverse effect that excessive downtime has on mission success. Therefore, once the operational requirements of a system are fixed, it is imperative that a technique be utilized to predict its maintainability in quantitative terms as early as possible during the design phase. This prediction should be updated continuously as the design progresses to assure a high probability of compliance with specified requirements.

A significant advantage of using a maintainability prediction procedure is that it highlights for the designer those areas of poor maintainability which justify product improvement, modification, or a change of design. Another useful feature of maintainability prediction is that it permits the user to make an early assessment of whether the predicted downtime, the quality, quantity of personnel, tools and test equipment are adequate and consistent with the needs of system operational requirements.

DEFINITION OF MAINTAINABILITY: MIL-STD-721 defines maintainability as follows:

> "Maintainability: The measure of the ability of an item to be retained in or restored to specific conditions when maintenance is performed by personnel having specified skill levels, using prescribed procedures and resources at each prescribed level of maintenance and repair."

This definition has fostered the development of many maintainability prediction procedures for providing an assessment of system maintainability. Each of these uses various quantitative measures to indicate system maintainability. However, all of these measures have a specific relationship to, or constitute some element of the distribution of total system downtime. Hence, if a universal method or technique can be developed to determine the "Total System Downtime Distribution" for any type of system, this would facilitate calculating the measures of maintainability currently in use.

Copyright Naval Air Systems Command
Provided by IHS
No reproduction or networking permitted without license from IHS

Licensee=NASA Technical Standards 4/9972545004, User=Aziz, Syed
Not for Resale, 05/31/2015 16:29:48 MDT

BASIC ASSUMPTIONS AND INTERPRETATIONS: Each maintainability prediction procedure included in this handbook depends upon the use of recorded reliability and maintainability data and experience which have been obtained from comparable systems and components under similar conditions of use and operation. It is also customary to assume the applicability of the "principle of transferability." This assumes that data which accumulate from one system can be used to predict the maintainability of a comparable system which is undergoing design, development, or study. This procedure is justifiable when the required degree of commonality between systems can be established. Usually during the early design phase of the life cycle, commonality can only be inferred on a broad basis. However, as the design becomes refined, during later phases of the life cycle, commonality is extendable if a high positive correlation is established relating to equipment functions, to maintenace task times, and to levels of maintenance. Although the techniques contained in this handbook have been proposed and appear to fit certain applications, it should be borne in mind that they have not truly been tested for generality, for consistency one to another, or for most other criteria dealing with broad applicability. It should also be borne in mind, though, that experience has shown that the advantages greatly outweigh the burden of making a prediction. For that reason, it is not the purpose of this document to deter further research or inquiry.

ELEMENTS OF MAINTAINABILITY PREDICTION TECHNIQUES: Each maintainability prediction technique utilizes procedures which are specifically designed to satisfy its method of application. However, all maintainability prediction methods are dependent upon at least two basic parameters:

(a) Failure rates of components at the specific assembly level of interest.

(b) Repair time required at the maintenance level involved.

There are many sources which record the failure rate of parts as a function of use and environment. This failure rate, is expressed as the number of failures per unit of time. A typical measure is "failures per 10^6 hours." The major advantage of using the failure rate in maintainablity prediction calculations is that it provides an estimate of the relative frequency of failure of those components which are utilized in the design. Similarly, the relative frequency of failure of components at other maintainable levels can be determined by employing standard reliability prediction techniques using parts failure rates. Failure rates can also be utilized in applicable regression equations for calculating the maintenance action time. Another use of the failure rates is to weight the repair times for various categories of repair activity, in order to provide an estimate of its contribution, to the total maintenance time.

Copyright Naval Air Systems Command 34
Provided by IHS
No reproduction or networking permitted without license from IHS

Licensee=NASA Technical Standards 4/9972545004, User=Aziz, Syed
Not for Resale, 05/31/2015 16:29:48 MDT

Repair times are determined from prior experience, simulation of repair tasks, or past data secured from similar applications. Most procedures break up the "maintenance action", which is a more general expression than "repair action", into a number of basic maintenance tasks whose time of performance is summed to obtain the total time for the maintenance action.

SUMMARY: It is emphasized that the selection and application of the proper maintainability technique results in many economies measured in terms of man-hours, materiel, and money. These savings are attributable to the fact that maintainability prediction is considered to be a tool for design enhancement because it provides for the early recognition and elimination of areas of poor maintainability during the early stages of the design life cycle. Otherwise, areas of poor maintainability would only become apparent during demonstration testing or actual use, after which time, correction of design deficiencies would be costly and unduly delay schedules and missions.

Maintainability prediction, therefore, is a most useful instrument to both manager and engineer because it provides for improved system effectiveness and reduces administrative and maintenance costs.

The comparison matrix, Figure A, is included to provide a summary of the significant attributes of each maintainability prediction procedure included in this handbook. Additional details may be obtained by referring to specific maintainability prediction procedures of interest.

Copyright Naval Air Systems Command
Provided by IHS
No reproduction or networking permitted without license from IHS

Licensee=NASA Technical Standards 4/9972545004, User=Aziz, Syed
Not for Resale, 05/31/2015 16:29:48 MDT

Figure A. Comparison Matrix of Maintainability Prediction Procedures

Procedure	Applicability	Point of Application	Basic Parameters of Measure	Information Required	Correlation	Caution
I	To predict flight-line maintenance of airborne electronic and electromechanical systems involving modular replacement.	After establishment of the design concept provided that data as listed in the column entitled "Information Required" is available.	Distribution of downtimes for various Elemental Activities, Maintenance categories, Repair times, and System Downtime.	(a) Location & failure rate of components (b) Number of: 1. Replaceable components 2. Readouts 3. Spares 4. Test Points 5. Magnetrons (c) Duration of Average mission (d) Maintenance schedules, etc.	See Figure 1-1 to 1-6 for correlation between the observed and predicted values of various maintainability parameters.	It may be necessary to identify additional elemental activities and derive their appropriate parameters for application to equipments other than those indicated under Applicability.
II	To predict the maintainability of shipboard and shore electronic equipment and systems. It can also be used to predict the maintainability of mechanical systems provided that required task times and functional levels can be established.	Applicable during the final design stage.	Part A of procedure: Corrective maintenance expressed as an arithmetic or geometric mean time to repair in hours. Part B of procedure: Active maintenance in terms of: (a) Mean corrective maintenance time in manhours (b) Mean preventive maintenance time in manhours (c) Mean active maintenance time in terms of mean manhours per maintenance action.	For corrective maintenance (Part A): (a) Packaging: to the extent that detailed hardware configurations can be established (b) Diagnostic procedure (c) Repair methods (d) Parts listing (e) Operating Stresses (f) Mounting methods (g) Functional levels at which alignment and checkout occur. For active maintenance (Part B): The respective maintenance task times for corrective and preventive maintenance must have been determined.	A validation study of the AN/URC-32 Transceiver and the AN/SRT-16 Transmitter, which were used on many ship types from destroyers to submarines, showed good correlation between predicted and observed corrective maintenance results.	The tabulated task times are not applicable to all types of equipments and situations. For a particular application, when the validity of the task times is in question, additional data sources may have to be used or estimates made by the analyst.
III	To predict the mean and maximum active corrective maintenance downtime for Air Force ground electronic systems and equipment. It may also be used to predict preventive maintenance downtime.	Applied during the Design Development and Control Stages.	(a) Mean and maximum active corrective downtime (95th percentile) (b) Mean and maximum preventive downtime (c) Mean downtime	The evaluator must have accessibility to and be familiar with at least the following: (a) Schematic diagrams (b) Physical layouts (c) Functional operation (d) Tools and test equipment (e) Maintenance aids (f) Operational and Maintenance environment.	Correlation between predicted and observed values can be good if: (a) Adequate information is available (b) Experienced analysts are used to select maintenance tasks to be evaluated.	The scoring of the respective checklists must be performed by analysts who are well familiar with the equipment. It is reasonable to expect variation in the regression coefficients as maintenance situations and equipments change. The extent of this variation has not as yet been determined.

Copyright Naval Air Systems Command
Provided by IHS
No reproduction or networking permitted without license from IHS

Licensee=NASA Technical Standards 4/9972545004, User=Aziz, Syed
Not for Resale, 05/31/2015 16:29:48 MDT

Copyright Naval Air Systems Command
Provided by IHS
No reproduction or networking permitted without license from IHS

Figure A. Comparison Matrix of Maintainability Prediction Procedures -- continued

Procedure	Applicability	Point of Application	Basic Parameters of Measure	Information Required	Correlation	Caution
IV	To predict the mean and/or total corrective and preventive maintenance downtime of systems and equipments.	Applicable throughout the design, development cycle with various degrees of detail.	(a) Mean system maintenance downtime (b) Mean corrective maintenance downtime per operational period (c) Total corrective maintenance downtime per operational period (d) Total preventive maintenance downtime per operational period	Complete system documentation portraying: (a) Functional diagrams (b) Physical layouts (c) Front panel layouts (d) End item listings with failure rates.	Among similar procedures correlation between predicted and observed values has been good.	Care must be exercised in the estimation of times where data is not available. Sufficient equipment disclosure must be available to establish reasonable estimates.
V	To predict maintainability parameters of avionics, ground and shipboard electronics at the organizational, intermediate and depot levels of maintenance.	Applied at any equipment or system level, at any level of maintenance concept pertinent to avionics, ground electronics, and shipboard electronics.	(a) Mean time to repair (MTTR). (b) Maximum corrective maintenance time (M_{max} (%)). (c) Mean maintenance manhours per repair (MMH/repair). (d) Mean maintenance manhours per operating hour (MMH/OH). (e) Mean maintenance manhours per flight hour (MMH/FH).	Early Prediction (a) Primary Replaceable Items (b) Failure Rates (c) Fault Isolation Strategy (d) Replacement Concept (e) Packaging Philosophy (f) Fault Isolation Resolution Detailed Prediction (a) Replacement Concept (b) Fault Detection and Isolation Outputs (c) Failure Rate (d) Maintenance Procedure	Correlation between the predictions and the observed are limited by the quality of the input data (Design Data).	Selection of appropriate elemental maintenance action times from Appendix A (Time Standards).

Licensee=NASA Technical Standards 4/9972545004, User=Aziz, Syed
Not for Resale, 05/31/2015 16:29:48 MDT

Copyright Naval Air Systems Command
Provided by IHS
No reproduction or networking permitted without license from IHS

Licensee=NASA Technical Standards 4/9972545004, User=Aziz, Syed
Not for Resale, 05/31/2015 16:29:48 MDT

PROCEDURE V

1. GENERAL

This procedure can be used to predict maintainability parameters of avionics, ground and shipboard electronics at the organizational, intermediate and depot levels of maintenance. It can also be applied to any application environment and type of equipment including mechanical equipment. Time standards are for electronics only.

1.1 Philosophy and assumptions. The maintainability procedures presented here permit analyzing the maintainability of electronic equipment/systems including direct accountability of diagnostics/isolation/test capabilities, replaceable item construction, (a replaceable item (RI) is any of those physical entities normally removed and replaced to effect repair at the maintenance level for which the prediction is being made) packaging, and component failure rates. In addition, the following assumptions and stipulations apply to any predictions made using the procedures given here:

a. Failure rates experienced are all in the same proportion to those predicted.

b. Only one failure at a time is considered.

c. Maintenance is performed in accordance with established maintenance procedures.

d. Maintenance is performed by maintainers possessing the appropriate skills and training.

e. Only active maintenance time is addressed; administrative and logistic delays, and clean-up are excluded.

Two separate methods are presented. Method A is an early prediction method that makes use of estimated design data and can be applied much earlier than Method B in the development of an equipment or system. Method B is a detailed prediction method that uses actual detailed design data to predict maintainability parameters.

The application of the procedures presented here permits the user to monitor the overall system maintainability throughout the design and development of that system. The user can identify whether or not the specified maintainability design requirements will be met before the system is complete. Thus, if it appears the maintainability requirements will not be met, the designers can be informed and the necessary changes can be made before they become prohibitively expensive.

1.2 Point of application. Both of the prediction methods (Method A is the early prediction and Method B is the detailed prediction) of this procedure can be applied at any equipment or system level, at any level of maintenance, and for any maintenance concept pertinent to avionics, ground electronics, and shipboard electronics. (While the prediction methods were developed

Copyright Naval Air Systems Command
Provided by IHS
No reproduction or networking permitted without license from IHS

Licensee=NASA Technical Standards 4/9972545004, User=Aziz, Syed
Not for Resale, 05/31/2015 16:29:48 MDT

specifically for electronic equipments and systems, there is nothing inherent in the methods that should prevent them from being applicable to electro-mechanical or mechanical equipments or systems.)

1.3 Basic parameters of measure. Mean time to repair (MTTR) is the primary maintainability parameter that can be predicted using this procedure. The other maintainability parameters that can be predicted using this procedure are: maximum corrective maintenance time at the Φ percentile ($M_{ct}(\Phi)$), percent of faults isolatable to a single replaceable item (I_1); percent of faults isolatable to $\leq N$ replaceable items (I_N), mean maintenance manhours per repair ($\overline{MMH}$/repair), mean maintenance manhours per operating hour ($\overline{MMH}$/OH), mean maintenance manhours per flight hour ($\overline{MMH}$/FH). (For details see paragraph 3.2.)

1.4 Information required. These data items must be provided as part of the maintainability prediction if they are not provided from another source. (See MIL-STD-756 and MIL-STD-1629.)

1.4.1 Method A. To use Method A the following data are necessary:

a. The number and contents of (either actual or estimated) the primary replaceable items.

b. The failure rates, either predicted or estimated, associated with each replaceable item.

c. The basic fault isolation test strategy of each replaceable item.

d. The replacement concept, if fault isolation is to a group of replaceable items.

e. The packaging philosophy

f. The fault isolation resolution, either estimated or required (i.e., % of faults isolated to one replaceable item or the average replaceable item group size).

1.4.2 Method B. The data necessary to implement Method B are:

a. The replacement concept for each replaceable item or group of items.

b. The fault detection and isolation outputs associated with each replaceable item.

c. The failure rate of each replaceable item.

d. The maintenance procedure that is followed to remove and replace each replaceable item.

Copyright Naval Air Systems Command
Provided by IHS
No reproduction or networking permitted without license from IHS

Licensee=NASA Technical Standards 4/9972545004, User=Aziz, Syed
Not for Resale, 05/31/2015 16:29:48 MDT

2. REFERENCED DOCUMENTS

2.1 Issues of documents. The following documents of the issue in effect on the date of invitation for bid or request for proposal, are referenced in this procedure for information and guidance.

STANDARDS

Military

MIL-STD-721	Definitions of Terms for Reliability and Maintainability
MIL-STD-756	Reliability Modeling and Prediction
MIL-STD-1629	Procedures for Performing a Failure Mode, Effects and Criticality Analysis

(Copies of specifications, standards, drawings, and publications required by contractors in connection with specific procurement functions should be obtained from the contracting activity or as directed by the contracting officer.)

3. BASIC DEFINITIONS AND MODELS

3.1 MTTR elements. Corrective maintenance actions consist of the following tasks: Preparation, Fault Isolation, Fault Correction (further broken down into Disassembly, Interchange, Reassembly, Alignment, Checkout). The time to perform each of these tasks is an element of MTTR. Hence the task times are called MTTR elements.

The definitions for these MTTR elements and their abbreviations are used in the prediction models are as follows:

MTTR ELEMENT (Abbreviation)	DEFINITION
Preparation ($T_{p_{nj}}$)	Time associated with those tasks required to be performed before fault isolation can be executed.
Fault Isolation ($T_{fi_{nj}}$)	Time associated with those tasks required to isolate the fault to the level at which fault correction begins.
Disassembly ($T_{D_{nj}}$)	Time associated with gaining access to the replaceable item or items identified during the fault isolation process.
Interchange ($T_{I_{nj}}$)	Time associated with the removal and replacement of a faulty replaceable item or suspected faulty item.
Reassembly ($T_{R_{nj}}$)	Time associated with closing up the equipment after interchange is performed.

Copyright Naval Air Systems Command
Provided by IHS
No reproduction or networking permitted without license from IHS

Licensee=NASA Technical Standards 4/9972545004, User=Aziz, Syed
Not for Resale, 05/31/2015 16:29:48 MDT

Copyright Naval Air Systems Command
Provided by IHS
No reproduction or networking permitted without license from IHS

Licensee=NASA Technical Standards 4/9972545004, User=Aziz, Syed
Not for Resale, 05/31/2015 16:29:48 MDT

TABLE V-I. MTTR Elements for Prediction Procedure V.

Isolation to Single RI	Isolation to Group with Group Replacement	Isolation to Group with Iterative Replacement	Isolation with Ambiguity (Requires Further Isolation)	
Preparation	Preparation	Preparation	Preparation	Secondary Preparation
Isolation	Isolation	Isolation	Isolation	Secondary Isolation
Disassembly	Disassembly	Disassembly	Disassembly	Secondary Fault Correction
Interchange	Interchange	Interchange	Interchange	
Reassembly	Reassembly	Reassembly	Reassembly	
'ignment	Alignment	Alignment	Alignment	
Checkout	Checkout	Checkout	Checkout	
Start Up	Start Up	Start Up	Continue	Start Up

Copyright Naval Air Systems Command
Provided by IHS
No reproduction or networking permitted without license from IHS

Licensee=NASA Technical Standards 4/9972545004, User=Aziz, Syed
Not for Resale, 05/31/2015 16:29:48 MDT

3.2.1.1 Mean repair time for the nth RI.

$$R_n = \frac{\sum_{j=1}^{J} \lambda_{nj} R_{nj}}{\sum_{j=1}^{J} \lambda_{nj}}$$

J = number of unique FD&I outputs (refer to paragraph 4.2.3)

λ_{nj} = failure rate of those parts of the nth RI which would cause the nth RI to be called out in the jth FD&I output.

R_{nj} = average repair time of the nth RI when called out in the jth FD&I output as computed below:

3.2.1.2 Average repair time for the nth RI.

$$R_{nj} = \sum_{m=1}^{M_{nj}} T_{m_{nj}}$$

M_{nj} = number of steps to perform corrective maintenance when a failure occurs in the nth RI and results in the jth FD&I outputs. Includes all maintenance elements - preparation, isolation, et al. This may include operations on other RIs called out in the jth fault isolation result. (e.g. isolation to a group with iterative replacement).

$T_{m_{nj}}$ = Average time to perform the mth corrective maintenance step for the nth RI given the jth FD&I output.

3.2.2 Percent isolation to a single RI. The model for calculating the percent isolation to a single RI (I_1) is:

$$I_1 = \frac{\sum_{k=1}^{K} \lambda_k}{\sum_{n=1}^{N} \sum_{j=1}^{J} \lambda_{nj}} \times 100$$

Where: λ_{nj} = failure rate of those parts of the nth RI which would cause the nth RI to be called out in the jth FD&I output.

λ_k = failure rate associated with the kth FD&I output which results in isolation to a single RI.

K = number of FD&I outputs which result in isolation to a single RI.

Copyright Naval Air Systems Command
Provided by IHS
No reproduction or networking permitted without license from IHS

Licensee=NASA Technical Standards 4/9972545004, User=Aziz, Syed
Not for Resale, 05/31/2015 16:29:48 MDT

3.2.3 Percent isolation to a group of RIs. The model for calculating the percent isolation to a group of N or less RIs (I_N) is:

$$I_N = \frac{\sum_{p=1}^{P} \lambda_p}{\sum_{n=1}^{N} \sum_{j=1}^{J} \lambda_{nj}} \times 100$$

Where: λ_p = failure rate associated with the pth FD&I output which results in isolation to N or less RIs.

λ_{nj} = same as for I_1

P = number of FD&I outputs which result in isolation to N or less RIs.

Other maintenance parameters that can be predicted using these procedures are as follows:

3.3 Mean maintenance manhours per repair ($\overline{MMH}$/repair).

$$\overline{MMH}/\text{Repair} = \frac{\sum_{n=1}^{N} \lambda_n \overline{MMH}_n}{\sum_{n=1}^{N} \lambda_n}$$

Where:

N = quantity of RI's

λ_n = failure rate of nth RI

$\overline{MMH}_n$ = mean maintenance manhours required to repair the nth RI

3.3.1 Mean maintenance manhours required to repair the nth RI.

$$\overline{MMH}_n = \frac{\sum_{j=1}^{J} \lambda_{nj} \; MMH_{nj}}{\sum_{j=1}^{J} \lambda_{nj}}$$

Copyright Naval Air Systems Command
Provided by IHS
No reproduction or networking permitted without license from IHS

Licensee=NASA Technical Standards 4/9972545004, User=Aziz, Syed
Not for Resale, 05/31/2015 16:29:48 MDT

J = quantity of FD&I results

λ_{nj} = failure rate associated with the jth result for the nth RI

MMH_{nj} = maintenance manhours required to repair the nth RI given the jth FD&I result

(Replace repair times in the appropriate Method A and Method B procedures with the maintenance manhours required for each repair action).

3.4 Mean maintenance manhours per maintenance action ($\overline{MMH}/MA$).

This is the same as $\overline{MMH}$/repair except that time spent as a result of system failure false alarms must also be included in the maintenance manhours.

Two types of false alarms are considered:

1) Type 1 false alarm is detected during normal operations but cannot be repeated during the fault isolation process.

2) Type 2 false alarm is detected and isolated to an RI when the RI does not have an actual fault.

$$\overline{MMH}/MA = \frac{\sum_{n=1}^{N} (1 + F_{2n})\, \lambda_n\, \overline{MMH}_n + \sum_{n=1}^{N} F_{1n} \lambda_n\, \overline{MMH}_D}{\sum_{n=1}^{N} (1 + F_{2n})\, \lambda_n + \sum_{n=1}^{N} F_{1n}\, \lambda_n}$$

F_{1n} = frequency of occurrence of type 1 false alarms 1/

F_{2n} = frequency of occurrence of type 2 false alarms 1/

1/ expressed as a fraction of the nth RI failure rate

$\overline{MMH}_D$ = mean maintenance manhours associated with Type 1 false alarms.

$\overline{MMH}_n$ = mean maintenance manhours required to repair the nth RI

Copyright Naval Air Systems Command
Provided by IHS
No reproduction or networking permitted without license from IHS

Licensee=NASA Technical Standards 4/9972545004, User=Aziz, Syed
Not for Resale, 05/31/2015 16:29:48 MDT

3.5 False alarm rates. False alarms are dependent on the system type, operating environment, maintenance environment, system design and fault detection and isolation implementation. Therefore, a standard set of false alarm values would be impossible to derive. A sample of false alarm rates experienced on two 1978 vintage equipment are presented for reference purposes.

SYSTEM/EQUIPMENT	Type 1 (F_{1r})[2/]	Type 2 (F_{2r})[3/]
Weapon Control System		
• Radar Subsystem	.41	.25
• Computer Subsystem	.63	.65
• Control Subsystem	1.32	.31
• Power Subsystem	.37	.66
• Auxiliary Subsystem	1.31	.54
Airborne Radar System		
• RF Unit	NA	.44
• Transmitter	NA	.31
• Receiver	NA	.12
• Antenna	NA	.08
• Analog Processor	NA	.07
• Digital processor #1	NA	.65
• Digital processor #2	NA	.50
• Control Unit	NA	.00
• Power & Antenna Servo	NA	.33

NA - Not Available

2/ The ratio of type 1 false alarms to actual failures
3/ The ratio of type 2 false alarms to actual failures

Copyright Naval Air Systems Command
Provided by IHS
No reproduction or networking permitted without license from IHS
Licensee=NASA Technical Standards 4/9972545004, User=Aziz, Syed
Not for Resale, 05/31/2015 16:29:48 MDT

3.6 Mean maintenance manhours per operating hour ($\overline{MMH}/OH$).

This includes the entire manpower that is required to maintain a system; corrective maintenance, preventive maintenance, and maintenance caused by false alarms.

$$\overline{MMH}/OH = \sum_{n=1}^{N} (1 + F_{2n})\, \lambda_n'\, \overline{MMH}_n + \sum_{n=1}^{N} F_{1n}\, \lambda_n'\, \overline{MMH}_D + \sum_{r=1}^{PM} F_r\, \overline{MMH}_r$$

λ_n' = λ_n expressed in failures per operating hour

F_r = frequency of rth preventive maintenance

$\overline{MMH}_r$ = mean maintenance manhours to perform r^{th} preventive maintenance type

PM = quantity of unique preventive maintenance types

N = quantity of RI's

F_{1n} = frequency of occurrence of type 1 false alarms 4/

F_{2n} = frequency of occurrence of type 2 false alarms 4/

$\overline{MMH}_D$ = mean maintenance manhours associated with type 1 false alarms

$\overline{MMH}_n$ = mean maintenance manhours required to repair the nth RI

4/ expressed as a fraction of the nth RI failure rate.

3.7 Mean maintenance manhours per flight hour ($\overline{MMH}/FH$). This is the same as $\overline{MMH}/OH$ where $\lambda_n' = \lambda_n$ is expressed in failures per flight hour.

3.8 Maximum corrective maintenance time for the (Φ) percentile (M_{max} (Φ)). Two M_{max} (Φ) models are provided. The first yields an approximate value and requires that system repair times be lognormally distributed. The second gives a more accurate value.

3.8.1 Approximate M_{max} (Φ). Appendix B contains tables of M_{max} (Φ) values for selected values of system Φ, system MTTR (MEAN), and standard deviation of system repair times (SIGMA). MTTR may be predicted using Method A, and the MTTR models in paragraph 3.2.1 above. SIGMA is usually determined from data on similar equipments. Approximate M_{max} (Φ) values for values of Φ, MEAN, and SIGMA not covered in Appendix B may be calculated by using the following equation:

Copyright Naval Air Systems Command
Provided by IHS
No reproduction or networking permitted without license from IHS

Licensee=NASA Technical Standards 4/9972545004, User=Aziz, Syed
Not for Resale, 05/31/2015 16:29:48 MDT

$$M_{max}(\Phi) = \exp[\log MTTR + \Phi\, SIGMA]$$

Where: $$SIGMA = \sqrt{\frac{\sum_{i=1}^{N} (\log R_i)^2 - [(\sum_{i=1}^{N} \log R_i)^2 / N]}{N-1}}$$

3.8.2 Accurate $M_{max}(\Phi)$. Appendix C presents a computerized means of predicting an accurate M_{max}, Φ. Appendix D presents a manual calculation method for predicting an accurate $M_{max}(\Phi)$.

4. APPLICATION. The application of the early and detailed maintainability prediction techniques is described in 4.1 and 4.2 respectively.

4.1 Method A - early prediction procedure. This section provides a step-by-step procedure for performing an early prediction of mean time to repair. The tasks involved in performing the early prediction are:

a. Define the prediction requirements.

b Define the replacement concept.

c. Determine the prediction parameters.

d. Select the appropriate models.

e. Compute the MTTR (or other parameters).

Descriptions of each of these tasks are provided in the following subsections.

4.1.1 Prediction requirement definition. This step of the prediction is in some respects the most important aspect since it establishes a common baseline of understanding the prediction purpose, approach and scope. During this step, the maintainability parameter(s) to be evaluated is defined, the prediction ground rules are established, and the maintenance level for which the prediction is being made is defined.

Parameter definition includes the selection (if required) or the parameter(s) to be evaluated and the establishment of a qualitative and quantitative definition of each parameter. If the prediction is being performed in compliance with a customer statement of work defining the parameter to be analyzed, it must be determined if the stated parameter is consistent with an equivalent parameter contained in this methodology. If not, the prediction models must be changed accordingly. As part of the parameter evaluation, it must be determined which elemental maintenance tasks (e.g., preparation, isolation, etc.) are to be included in the analysis and which are to be excluded.

The last aspect of this step is to explicitly define the maintenance level for which the prediction is being made. If the level is defined in terms of a specific maintenance organization (e.g., direct support unit, depot, etc.), then the tasks to be performed are readily defined by the maintenance concept as described in the following section. If the level is defined by operating level or location (e.g., on-site, flight-line, etc.), then this level must be redefined in terms of the maintenance organization(s) performing maintenance at the level/location.

Copyright Naval Air Systems Command
Provided by IHS
No reproduction or networking permitted without license from IHS

Licensee=NASA Technical Standards 4/9972545004, User=Aziz, Syed
Not for Resale, 05/31/2015 16:29:48 MDT

4.1.2 Replacement concept definition. The maintenance concept must be established, so that in conjunction with a definition of the prediction requirements (paragraph 4.1.1), a baseline is established which defines the prediction to be performed. With respect to the maintainability prediction, the primary ouput of the maintenance concept is the definition of how a repair is effected and what the replaceable items are.

As part of this process, a complete set of replaceable items is identified. If the maintenance concept allows for fault isolation to a group of RIs and repair by group replacement, then the RI groups can be reclassified as RIs if each of the groups is independent of other groups.

4.1.3 Determination of the prediction parameters. This step involves:

a. Defining the RIs.

b. Determining the failure rate (predicted or estimated) associated with each RI.

c. Defining fault isolation test methodology for each RI.

d. Defining the replacement concept.

e. Defining the packaging philosophy.

f. Determining the estimated or required fault isolation resolution (i.e., X% to 1 RI or average RI group size).

Forms similar to those in Figures V-1 and V-2 should be used for the data collection process. Data is collected on these forms at the level for which predictions are performed. For example, if a repair time is to be computed for every equipment within a system, then a seperate data collection form should be used for each equipment. Data should be tabulated as follows:

a. First tabulate all the primary RIs and their associated failure rates in the respective columns of Figure V-1.

b. Next describe all methods (V) for performing each elemental activity (m) in Figure V-2. (Note that some maintenance actions do not require that all the maintenance elements be included).

c. Next enter the appropriate number of headings (V_m) for each elemental activity along the top of Figure V-1.

d. For each elemental activity, (m,v) synthesize times (T_{mv}) using times, selected in accordance with paragraph 4.2.6 and note them in the respective column of Figure V-2.

e. Next enter the associated failure rate of each RI for the elemental activity that it pertains to in Figure V-1.

Copyright Naval Air Systems Command
Provided by IHS
No reproduction or networking permitted without license from IHS

Licensee=NASA Technical Standards 4/9972545004, User=Aziz, Syed
Not for Resale, 05/31/2015 16:29:48 MDT

Item Nomenclature				Preparation				Fault Isolation				Disassembly				
RI Description	λ	Qty	λ x Qty	$\lambda_{P_{1n}}$	$\lambda_{P_{2n}}$	...	$\lambda_{P_{V_{pn}}}$	$\lambda_{FI_{1n}}$	$\lambda_{FI_{2n}}$	...	$\lambda_{FI_{V_{FI}n}}$	$\lambda_{D_{1n}}$	$\lambda_{D_{2n}}$	...	...	
RI_1																
RI_2																
RI_3																
. . . . .																
RI_n																
Total $\Sigma\lambda$																

FIGURE V-1. RI Data Analysis Sheet - 1

Copyright Naval Air Systems Command
Provided by IHS
No reproduction or networking permitted without license from IHS
Licensee=NASA Technical Standards 4/9997254004, User=Aziz, Syed
Not for Resale, 05/31/2015 16:29:48 MDT

MTTR Element (m)	v	Description of the vth Method	I_{m_v}	λ_{m_v}
		(For additional data, see #12 of bibliography.)		

FIGURE V-2. RI Data Analysis Sheet - B

Copyright Naval Air Systems Command
Provided by IHS 17 Jan 1984
No reproduction or networking permitted without license from IHS

Licensee=NASA Technical Standards 4/9972545004, User=Aziz, Syed
Not for Resale, 05/31/2015 16:29:48 MDT

These completed data sheets provide the basis for the early prediction technique. Once they are complete the submodels can be applied.

4.1.4 General prediction model and submodel selection.

The general form of the prediction model is:

$$MTTR = \bar{T}_P + \bar{T}_{FI} + \bar{T}_{FC} + \bar{T}_A + \bar{T}_{CO} + \bar{T}_{ST} = \sum_{m=1}^{M} \bar{T}_m$$

Where:

$\bar{T}_P$ = Average Preparation Time

$\bar{T}_{FI}$ = Average Fault Isolation Time

$\bar{T}_D$ = Average Disassembly Time

$\bar{T}_I$ = Average Interchange Time

$\bar{T}_R$ = Average Reassembly Time

$\bar{T}_A$ = Average Alignment Time

$\bar{T}_{CO}$ = Average Checkout Time

$\bar{T}_{ST}$ = Average Startup Time

$\bar{T}_{FC} = \bar{T}_D + \bar{T}_I + \bar{T}_R$

$\bar{T}_m$ = average time of the mth element of MTTR.

Variations of the model are limited to deleting the time elements for elemental activity terms that are not necessary to complete certain maintenance actions.

The selection of submodels is dependent on the replacement policy imposed. The appropriate submodels for computing the average time for the above elemental activities are given in Figures V-3 and V-4.

The submodels presented are of a general form and can generally be applied to any equipment level (i.e., system, subsystem, equipment, etc.). The only limitation being that if $\bar{S}_c$ or $\bar{S}_I$ are computed, the prediction level must be consistent with the RI grouping rules presented in paragraph 4.1.5.1. Otherwise, the elemental activity submodels are applied at the lowest level for which an MTTR prediction is desired.

4.1.5 MTTR computation. The MTTR is computed at the level at which the average number of RIs contained in a fault isolation result ($\bar{S}_c$) or the average number of iterations required to correct a fault ($\bar{S}_I$) is established. For example, if $\bar{S}_I$ or $\bar{S}_c$ can be estimated for each equipment within a system, then the lowest level that the MTTR can be predicted is the equipment level. Higher level predictions of MTTR, such as system level MTTR, can be computed by taking a failure rate weighted average of the equipment MTTRs within the system.

Copyright Naval Air Systems Command
Provided by IHS
No reproduction or networking permitted without license from IHS

Licensee=NASA Technical Standards 4/9972545004, User=Aziz, Syed
Not for Resale, 05/31/2015 16:29:48 MDT

Maintenance Philosophy			Preparation $\bar{T}_P$	Fault Isolation $\bar{T}_{FI}$	Disassembly/Reassembly $\bar{T}_D/\bar{T}_R$	Interchange $\bar{T}_I$	Alignment $\bar{T}_A$	Check Out $\bar{T}_C$	Startup $\bar{T}_{ST}$
Isolation to a Single LRU					$\bar{T}_m = \frac{\sum_{i=1}^{V_m} \lambda_{m_i} T_{m_i}}{\sum_{i=1}^{V_m} \lambda_{m_i}}$ $m = D, R$	$\bar{T}_I = \frac{\sum_{i=1}^{V_I} \lambda_{I_i} T_{I_i}}{\sum_{i=1}^{V_I} \lambda_{I_i}}$			
Isolation to a Group of Equivalent LRUs	Group Replacement	Multiple Access			$\bar{T}_m = \sum_{i=1}^{A} \left[1 - \left(\frac{\lambda_T - \lambda_G}{\lambda_T}\right)^{S_G}\right] T_{m_i}$ $m = D, R$	$\bar{T}_I = (\bar{S}_I) \frac{\sum_{i=1}^{V_I} \lambda_{I_i} T_{I_i}}{\sum_{i=1}^{V_I} \lambda_{I_i}}$		$\bar{T}_C = \frac{\sum_{i=1}^{V_C} \lambda_{C_i} T_{C_i}}{\sum_{i=1}^{V_C} \lambda_{C_i}}$	
		Single Access			$\bar{T}_m = \frac{\sum_{i=1}^{V_m} \lambda_{m_i} T_{m_i}}{\sum_{i=1}^{V_m} \lambda_{m_i}}$ $m = D, R$				
	Iterative Replacement	Multiple Access: Reassembly Not Required for Checkout	$\bar{T}_P = \frac{\sum_{i=1}^{V_P} \lambda_{P_i} T_{P_i}}{\sum_{i=1}^{V_P} \lambda_{P_i}}$	$\bar{T}_{FI} = \frac{\sum_{i=1}^{V_{FI}} \lambda_{FI_i} T_{FI_i}}{\sum_{i=1}^{V_{FI}} \lambda_{FI_i}}$	$\bar{T}_m = \left(\frac{\bar{A}+1}{2}\right) \frac{\sum_{i=1}^{V_m} \lambda_{m_i} T_{m_i}}{\sum_{i=1}^{V_m} \lambda_{m_i}}$ $m = D, R$		$\bar{T}_A = \frac{\sum_{i=1}^{V_A} \lambda_{A_i} T_{A_i}}{\sum_{i=1}^{V_A} \lambda_{A_i}}$		$\bar{T}_{ST} = \frac{\sum_{i=1}^{V_{ST}} \lambda_{ST_i} T_{ST_i}}{\sum_{i=1}^{V_{ST}} \lambda_{ST_i}}$
		Multiple Access: Reassembly Required for Checkout			$\bar{T}_m = (\bar{S}_I) \frac{\sum_{i=1}^{V_m} \lambda_{m_i} T_{m_i}}{\sum_{i=1}^{V_m} \lambda_{m_i}}$ $m = D, R$	$\bar{T}_I = (\bar{S}_I) \frac{\sum_{i=1}^{V_I} \lambda_{I_i} T_{I_i}}{\sum_{i=1}^{V_I} \lambda_{I_i}}$		$\bar{T}_C = (\bar{S}_I) \frac{\sum_{i=1}^{V_C} \lambda_{C_i} T_{C_i}}{\sum_{i=1}^{V_C} \lambda_{C_i}}$	
		Single Access: Reassembly Not Required for Checkout			$\bar{T}_m = \frac{\sum_{i=1}^{V_m} \lambda_{m_i} T_{m_i}}{\sum_{i=1}^{V_m} \lambda_{m_i}}$ $m = D, R$				
		Single Access: Reassembly Required for Checkout			$\bar{T}_m = (\bar{S}_I) \frac{\sum_{i=1}^{V_m} \lambda_{m_i} T_{m_i}}{\sum_{i=1}^{V_m} \lambda_{m_i}}$ $m = D, R$				

FIGURE V-3. MTTR submodels.

Copyright Naval Air Systems Command
Provided by IHS
No reproduction or networking permitted without license from IHS
Licensee=NASA Technical Standards 4/9972545004, User=Aziz, Syed
Not for Resale, 05/31/2015 16:29:48 MDT

T_{P_v} - time required to prepare a system for fault isolation using the vth method

T_{FI_v} - time required to isolate a fault using the vth method

T_{D_v} - time required to perform disassembly using the vth method

T_{R_v} - time required to perform reassembly using the vth method

T_{I_v} - time required to interchange an RI using the vth method

T_{A_v} - time required to align or calibrate an RI using the vth method

T_{C_v} - time required to check a repair using the vth method

T_{ST_v} - time required to start up a system using the vth method

λ_{P_v} - failure rate of RIs associated with the vth method of performing preparation

λ_{FI_v} - failure rate of RIs associated with the vth method of performing fault isolation

λ_{D_v} - failure rate of RIs associated with the vth method of performing disassembly

λ_{R_v} - failure rate of RIs associated with the vth method of performing reassembly

λ_{I_v} - failure rate of RIs associated with the vth method of performing interchange

λ_{A_v} - failure rate of RIs associated with the vth method of performing alignment

λ_{C_v} - failure rate of RIs associated with the vth method of performing checkout

λ_{ST_v} - failure rate of RIs associated with the vth method of performing start-up

V_P - the number of unique ways to perform preparation

V_{FI} - the number of unique ways to perform fault isolation

V_D - the number of unique ways to perform disassembly

V_R - the number of unique ways to perform reassembly

V_I - the number of unique ways to perform interchange

V_A - the number of unique ways to perform alignment

V_C - the number of unique ways to perform check-out

V_{ST} - the number of unique ways to perform start-up

$\bar{S}_G$ - the average number of RIs contained in a fault isolation result

$\bar{S}_I$ - the average number of interchanges required to correct a fault

A - the number of unique accesses ($A \leq V_D$ or V_R)

$\bar{A}$ - the average number of unique accesses required per fault isolation result

λ_a - the failure rate of the RIs that require the ath type of access

λ_T - the total system failure rate

T_{D_a} - the time required to disassemble the ath access

T_{R_a} - the time required to reassemble the ath access

FIGURE V-4. Definitions of MTTR Submodel Terms.

Copyright Naval Air Systems Command
Provided by IHS
No reproduction or networking permitted without license from IHS
Licensee=NASA Technical Standards 4/9972545004, User=Aziz, Syed
Not for Resale, 05/31/2015 16:29:48 MDT

Computation of repair times below the level at which S(I or G) is established may result in an inaccurate account of repair times. The only exception to this is if fault isolation is down to a single RI ($\bar{S}_c = 1$) for the entire system, equipment ...), then the MTTR may be computed at any level since ambiguities between RIs do not exist. Otherwise, the following criteria must be followed:

In order to compute a repair time at a given level, a value for $\bar{S}$ (I or G) must be established at that level. After the level at which the repair times will be computed has been selected, the appropriate models are selected to compute time for each elemental activity at that level with higher level repair times being computed using a failure rate weighted average.

Values for $\bar{S}_c$, $\bar{S}_i$, $\bar{A}$, $\bar{T}_D'$ or $\bar{T}_R'$, where required, should be computed as detailed in the following subsections.

4.1.5.1 Method of computing $\bar{S}_c$ and $\bar{S}_i$. Two methods are presented for computing the average number of RIs in a fault isolation result ($\bar{S}_c$) and the average number of iterations required to correct a fault ($\bar{S}_i$), compute $\bar{S}$ (I or G) using the specified or design requirements, or compute S (I or G) by assessing the approximate fault isolation capabilities of the system or equipment.

4.1.5.1.1 Method 1. The first method of computing $\bar{S}_i$ or $\bar{S}_c$ depends upon how the fault isolation requirements are specified. In the fault isolation resolution is specified as follows:

$X_1\%$ to $\leq N_1$ RIs

N_1 RI_s $< X_2\%$ to $\leq N_2$ RIs

N_2 RI_s $\leq X_3\%$ to $\leq N_3$ RIs

and $X_1 + X_2 + X_3 = 100$

then,

$$\bar{S} = \frac{X_1\left(\frac{N_1 + 1}{2}\right) + X_2\left(\frac{N_1 + N_2 + 1}{2}\right) + X_3\left(\frac{N_2 + N_3 + 1}{2}\right)}{100}$$

If the fault isolation requirements are specified as follows:

$X_1\%$ to $\leq N_1$ RIs

$X_2\%$ to $\leq N_2$ RIs

100% to $\leq N_3$ RIs

Where $X_1\% < X_2\% < 100\%$

Copyright Naval Air Systems Command
Provided by IHS 12 Jan 1984
No reproduction or networking permitted without license from IHS

Licensee=NASA Technical Standards 4/9972545004, User=Aziz, Syed
Not for Resale, 05/31/2015 16:29:48 MDT

then,

$$\bar{S} = \frac{X_1 \left(\frac{N_1 + 1}{2}\right) + (X_2 - X_1)\left(\frac{N_1 + N_2 + 1}{2}\right) + (100 - X_2)\left(\frac{N_2 + N_3 + 1}{2}\right)}{100}$$

The predicted MTTR using this method of computing $\bar{S}$ is based on the assumption that the specified fault isolation requirements have been (or will be) met. The resulting prediction is the inherent MTTR that will be realized by achieving the specified requirements. This approach is valuable during the early stages of equipment development for purposes of allocation and assessment of the requirements facility. This approach should not be used when data is available on the actual fault isolation characteristics.

4.1.5.1.2 Method 2. The second method of computing $\bar{S}_i$ or $\bar{S}_c$ involves an analysis of the fault isolation characteristics of the subject equipment/system as follows:

a. Prepare a simple block diagram depicting the system and how each major function is related (i.e., show functional interfaces).

b. Group the functions (RIs) into "G" RI sets such that:

- an estimate of the fault isolation (number of RIs) can be determined for each RI set.

- each RI set is independent of any other RI set.

- each RI set established is the smallest set that can be established.

c. For each RI set (g) estimate the average fault isolation resolution or the average number of RIs per fault isolation result depending on the replacement philosophy in question $\bar{S}_{(i)g}$ if iterative replacement, $\bar{S}_{(c)g}$ if group replacement).

d. Compute the average $\bar{S}_i$ or $\bar{S}_c$ for the system or equipment using a failure rate weighted model.

$$\bar{S} \text{ or } \bar{S}_c = \frac{\sum_{g=1}^{G} \lambda_g \bar{S}_g}{\sum_{g=1}^{G} \lambda_g}$$

If the repair times are computed at lower levels, then the overall $\bar{S}$ does not have to be computed.

4.1.5.2 Computation of $\bar{A}$, $\bar{T}_c'$, and $\bar{T}_o'$. The average number of accesses (disassemblies and reassemblies) required per fault isolation result ($\bar{A}$) can be computed as follows:

Copyright Naval Air Systems Command
Provided by IHS
No reproduction or networking permitted without license from IHS
Licensee=NASA Technical Standards 4/9972545004, User=Aziz, Syed
Not for Resale, 05/31/2015 16:29:48 MDT

$$\bar{A} = \frac{\sum_{g=1}^{G} \lambda_g \bar{A}_g}{\sum_{g=1}^{G} \lambda_g}$$

and,

$$\bar{A}_g = \sum_{a=1}^{A_g} P_{ga} = \sum_{a=1}^{A_g} \left[1 - \frac{(\lambda_g - \lambda_{ga})^{\bar{S}_g}}{\lambda_g} \right]$$

Where:

$\bar{A}_g$ = the average number of accesses required per fault isolation result in the gth RI set, ("G" RI sets established the same way as was done for S)

P_{ga} = the probability that the ath access will be required for any random fault isolation result

A_g = the number of unique accesses in the gth RI set

λ_g = the failure rate of the RIs located in the gth RI set

λ_{ga} = the failure rate of the RIs located in the ath access location of the gth RI set

$\bar{S}_g$ = average number of RIs per fault isolation result for the gth RI set

The computation of $\bar{T}_D'$ and $\bar{T}_R'$ is exactly like the method used for $\bar{A}$ with one modification. Each probability is multiplied by its appropriate disassembly for reassembly time. The equation for $\bar{T}_D'$ or $\bar{T}_R'$ is:

$$\bar{T}_D' = \frac{\sum_{g=1}^{G} \lambda_g \bar{T}_{D_g}'}{\sum_{g=1}^{G} \lambda_g}$$

Copyright Naval Air Systems Command
Provided by IHS
No reproduction or networking permitted without license from IHS

Licensee=NASA Technical Standards 4/9972545004, User=Aziz, Syed
Not for Resale, 05/31/2015 16:29:48 MDT

and,

$$\bar{T}_D' = \frac{\sum_{g=1}^{G} \lambda_g \bar{T}_{D_g}'}{\sum_{g=1}^{G} \lambda_g}$$

Where:

$$\bar{T}_{D_g}' = \sum_{a=1}^{A_g} \left[1 - \frac{(\lambda_g - \lambda_{ga})^{\bar{S}_g}}{\lambda_g} \right] T_{D_{ga}}$$

The same equations also hold true for reassembly, ($\bar{T}_{R_g}'$)

where:

$T_{D_{ga}}$ = the diassembly or reassembly time for the ath access of the gth RI set.

Note here also that if the RIs are grouped into just one set instead of G sets, then all the subscripts "g" will fall-out and the failure rate weighting of the gth RI sets is not necessary.

4.1.5.3 Determination of MTTR. The MTTR can now be computed by summing up the average times computed from each submodel. Thus, the MTTR is expressed as

$$MTTR = \sum_{m=1}^{M} \bar{T}_m$$

Copyright Naval Air Systems Command
Provided by IHS
No reproduction or networking permitted without license from IHS

Licensee=NASA Technical Standards 4/9972545004, User=Aziz, Syed
Not for Resale, 05/31/2015 16:29:48 MDT

If the repair time computed is for a lower level then the higher level repair times are computed as follows:

$$MTTR = \frac{\sum_{b=1}^{B} \lambda_b \, MTTR_b}{\sum_{b=1}^{B} \lambda_b}$$

$MTTR_b$ = mean repair time of the bth lower level

λ_b = failure rate of the bth lower level

B = quantity of lower level breakdowns.

4.2 Method B - Detailed prediction procedure. This section provides a step by step procedure for performing a detailed prediction of mean time to repair (MTTR). The tasks involved in performing the prediction are:

a. Define the prediction requirements.

b. Define the replacement concept.

c. Identify the fault detection and isolation outputs (FD&I outputs).

d. Correlate the FD&I outputs and hardware features.

e. Correlate replaceable items and fault detection and isolation outputs.

f. Prepare a maintenance flow diagram.

g. Prepare time line analyses.

h. Compute the maintainability parameters.

Descriptions of each of the tasks are provided in the following subsections.

4.2.1 Prediction requirements definition. This step is similar to that required for an early prediction; refer to paragraph 4.1.1.

4.2.2 Replacement concept definition. This step is similar to that required for an early prediction; refer to paragraph 4.1.2.

Copyright Naval Air Systems Command
Provided by IHS
No reproduction or networking permitted without license from IHS

Licensee=NASA Technical Standards 4/9972545004, User=Aziz, Syed
Not for Resale, 05/31/2015 16:29:48 MDT

4.2.3 Fault detection and isolation output identification. This step involves the identification of all the "outputs" which are used in the fault detection and isolation process. Normally, the fault detection and isolation processes are segregated. However, for purposes of maintainability prediction, the fault detection methodology is considered as the first step of fault isolation and is properly included as part of the isolation capability. Any time associated with fault detection (e.g., mean fault detection time) is normally excluded from the prediction model, but can be included if desired.

The term fault detection and isolation outputs is defined as those indications, symptoms, printouts, readouts, or the results of manual procedures which separately or in combination, identify to the maintenance technician the procedure to be followed.

FD&I outputs will vary in form, format, complexity and data content from system to system and some will be more obvious than others. The maintenance actions taken in response to these outputs may depend upon the system maintenance environment and the system operating criticality. It is important, therefore, not only to identify the FD&I outputs but also to ensure that the FD&I outputs identified are the ones that will be used in the intended maintenance environment.

Some of the more common generic FD&I outputs are:

a. Indicator or annunciator.

b. Diagnostic or BIT output.

c. Meter readings.

d. Circuit breaker and fuse indicators.

e. Display presentation.

f. Alarms.

g. Improper system operation.

h. Improper system response.

i. System operating alerts.

To apply the prediction methodology presented herein, the predictor should first identify all primary unique outputs upon which the maintenance technician relies to make decisions on the repair methodology (e.g., perform adjustment, replace RI, proceed to a different method of fault isolation, etc.). Secondary outputs should then be identified for those cases where the primary output yielded a result which did not correct the problem and further isolation is required.

Copyright Naval Air Systems Command
Provided by IHS
No reproduction or networking permitted without license from IHS

Licensee=NASA Technical Standards 4/9972545004, User=Aziz, Syed
Not for Resale, 05/31/2015 16:29:48 MDT

4.2.4 FD&I outputs and hardware correlation. The key to this prediction procedure, and by far the most demanding of the prediction tasks, is the establishment of a correlation between the FD&I outputs (See paragraph 4.2.7) and the hardware for which the prediction is being made. This step demands a thorough understanding of the system hardware, software, monitoring and diagnostic capabilities, and of the FD&I features inherent to the system. FD&I features are those hardware and software elements, or combinations thereof, which generate or cause to be generated each FD&I output.

This task can be accomplished either from the top down or bottom up. The top down approach involves a fault tree technique where the top of the tree is each unique FD&I output; the next tier identifies the FD&I feature(s) which can yield the subject output; and, the bottom tier identifies the RIs or partial RIs which upon failure would be detected or isolated by the subject FD&I feature. The bottom up approach involves identification of all the circuitry in terms of RIs associated with each FD&I feature, and the analysis of how a failure of each RI presents itself in terms of a FD&I output.

Either approach requires the same five steps to be performed:

a. Identify all FD&I features.

b. Identify the circuitry associated with each feature.

c. Identify the FD&I sequencing.

d. Establish the RI failure rate associated with each FD&I feature.

e. Correlate the FD&I features with the FD&I outputs.

FD&I features are those hardware and software elements, or combinations thereof, which generate or cause to be generated each FD&I output. Typical features include diagnostic program routines, BIT routines, BITE, performance monitoring programs, status monitors, and test points.

After the FD&I features are identified, the circuit schematics are analyzed to identify the components tested or verified by each feature. The outputs of this analysis are then translated into a matrix as shown in Figure V-5. The matrix identifies, for each FD&I feature, the RIs and components which are tested by that feature. Also included in the matrix is an identifier which defines the order in which the FD&I features are utilized during the isolation process.

Copyright Naval Air Systems Command
Provided by IHS
No reproduction or networking permitted without license from IHS

Licensee=NASA Technical Standards 4/9972545004, User=Aziz, Syed
Not for Resale, 05/31/2015 16:29:48 MDT

The matrix is used to identify the failure rate of each RI associated with each FD&I feature. The first FD&I feature is examined and the failure rate of each component associated with that feature is entered in the matrix under that feature. The second feature is then examined, etc. If a component is tested by more than one feature, the failure rate is assigned to the first feature which would result in a positive failure indication. If different tests of the same component check different failure modes, then the failure rate is apportioned to each feature based on the relative occurrence of each failure mode. The failure rates for the components under each RI in each FD&I feature column are summed together and entered as the failure rate for the RI checked by that particular feature. This assumes the feature either checks a single RI or can check multiple RIs by some sequencing scheme. Those components which are not included under any FD&I features represent failures not isolated with the FD&I features. The failure rates of the failures not isolated by the FD&I features are noted in the manual isolation failure rate column of the matrix to complete the accounting of the total equipment failure rate. All manual isolation cases must be accounted for.

If those cases where the n'^h failure rate is known to result in several FD&I outputs, but the allocated failure rates are not known, the rationale for the assumed allocation of the failure rates shall be stated.

Nomenclature		Fault Detection and Isolation Features						
RI/Component	Failure Rate	Feature 1	Feature 2	Feature 3	Feature 4	Feature 5	Feature N	Manual Isolation Failure Rate
		Seq No.	Seq No.	Seq No.	Seq No.	Seq No.	Seq No.	
RI No. 1								
Component A								
Component B								
Component C								
Component D								
Component E								
Component F-M								
Component N								
Component P-T								
RI No. 2								
Component A								
Component B								

*Component - Item lower level of assembly

FIGURE V-5. Matrix for correlating FD&I features with RIs.

Copyright Naval Air Systems Command
Provided by IHS
No reproduction or networking permitted without license from IHS

Licensee=NASA Technical Standards 4/9972545004, User=Aziz, Syed
Not for Resale, 05/31/2015 16:29:48 MDT

The next step in the correlation process is to associate the FD&I features with the FD&I outputs. This is accomplished using a fault tree type diagram such as the sample shown in Figures V-6 & V-7. The Top of the tree consists of all FD&I outputs; the second tier contains the FD&I features which separately or jointly result in the given FD&I output; and, the bottom tier presents the RIs associated with each FD&I feature and the failure rate associated with that feature. The circles are used to assign numbers to all unique FD&I outputs. The triangles identify the order in which RIs are replaced when the replacement concept calls for iterative replacement.

4.2.5 Prepare maintenance flow diagrams. Next a maintenance flow diagram (MFD) is prepared to establish the R_{nj} values for insertion in the Maintenance Correlation Matrix (Figure V-10). The MFD is prepared to illustrate the sequence of maintenance required. The symbols used in the MFD are:

Starting Point (i.e., Failure Occurs and is Detected) or Ending Point

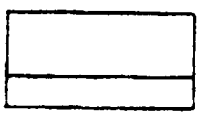

Activity Block. The top of the block indicates a specific maintenance activity and the bottom indicates the time associated with that activity. This is the only symbol that denotes time.

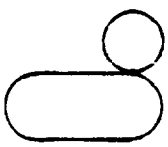

FD&I Outputs. Designates the primary or secondary unique FD&I output which defines the subsequent maintenance activity to be performed. The "j" associated with the output is entered in the circle.

Decision Point. Defines a point in the maintenance flow at which time the maintenance technician must make a decision on which subsequent path to take.

Path Identifier. Uniquely identifies each path by unique RI(n) and FD&I output (j).

Continuation. Designates continuation from or to another place in the maintenance flow diagram.

Copyright Naval Air Systems Command
Provided by IHS
No reproduction or networking permitted without license from IHS

Licensee=NASA Technical Standards 4/9972545004, User=Aziz, Syed
Not for Resale, 05/31/2015 16:29:48 MDT

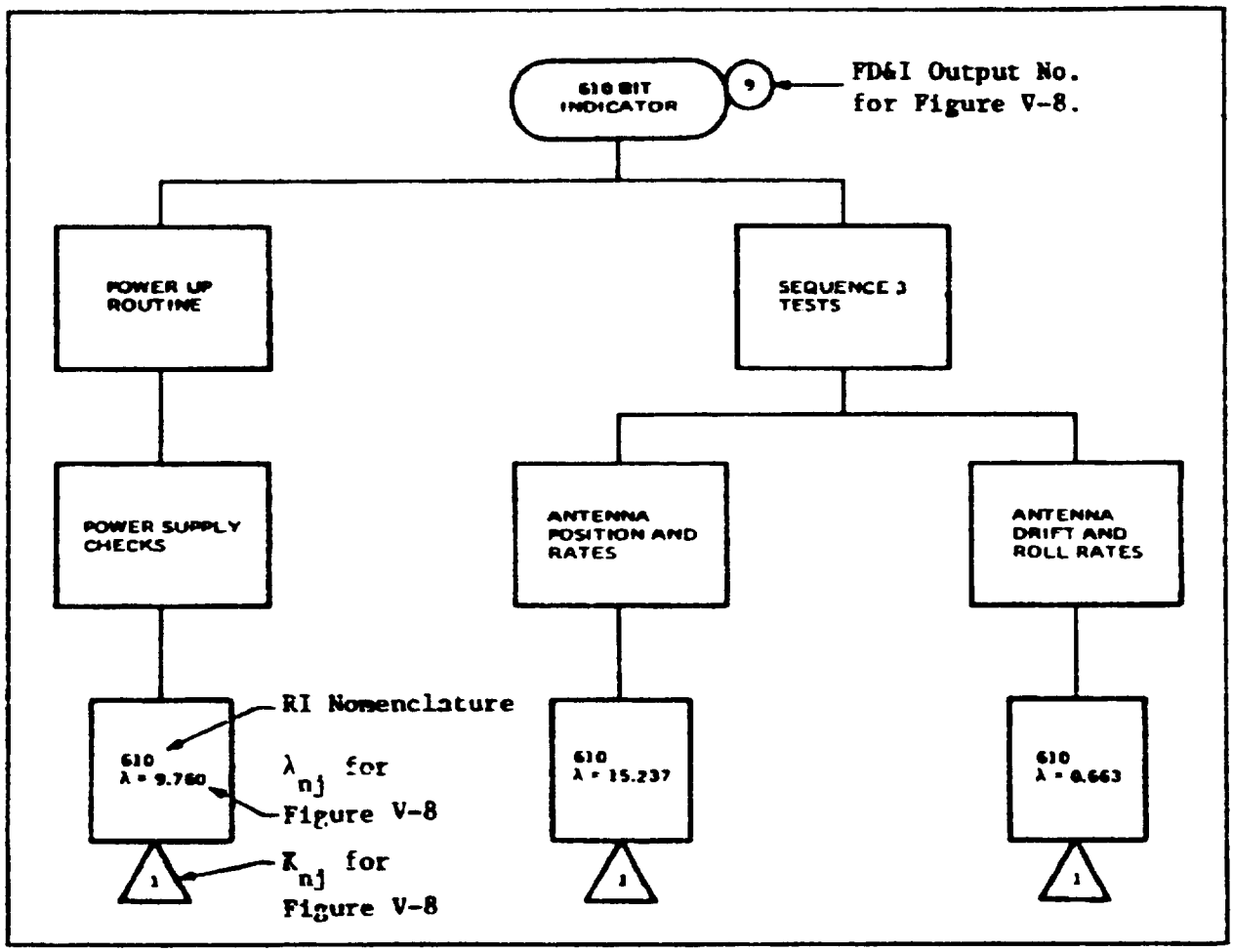

FIGURE V-6. Fault isolation output and RI correlation tree.

Copyright Naval Air Systems Command
Provided by IHS
No reproduction or networking permitted without license from IHS

Licensee=NASA Technical Standards 4/9972545004, User=Aziz, Syed,
Not for Resale, 05/31/2015 16:29:48 MDT

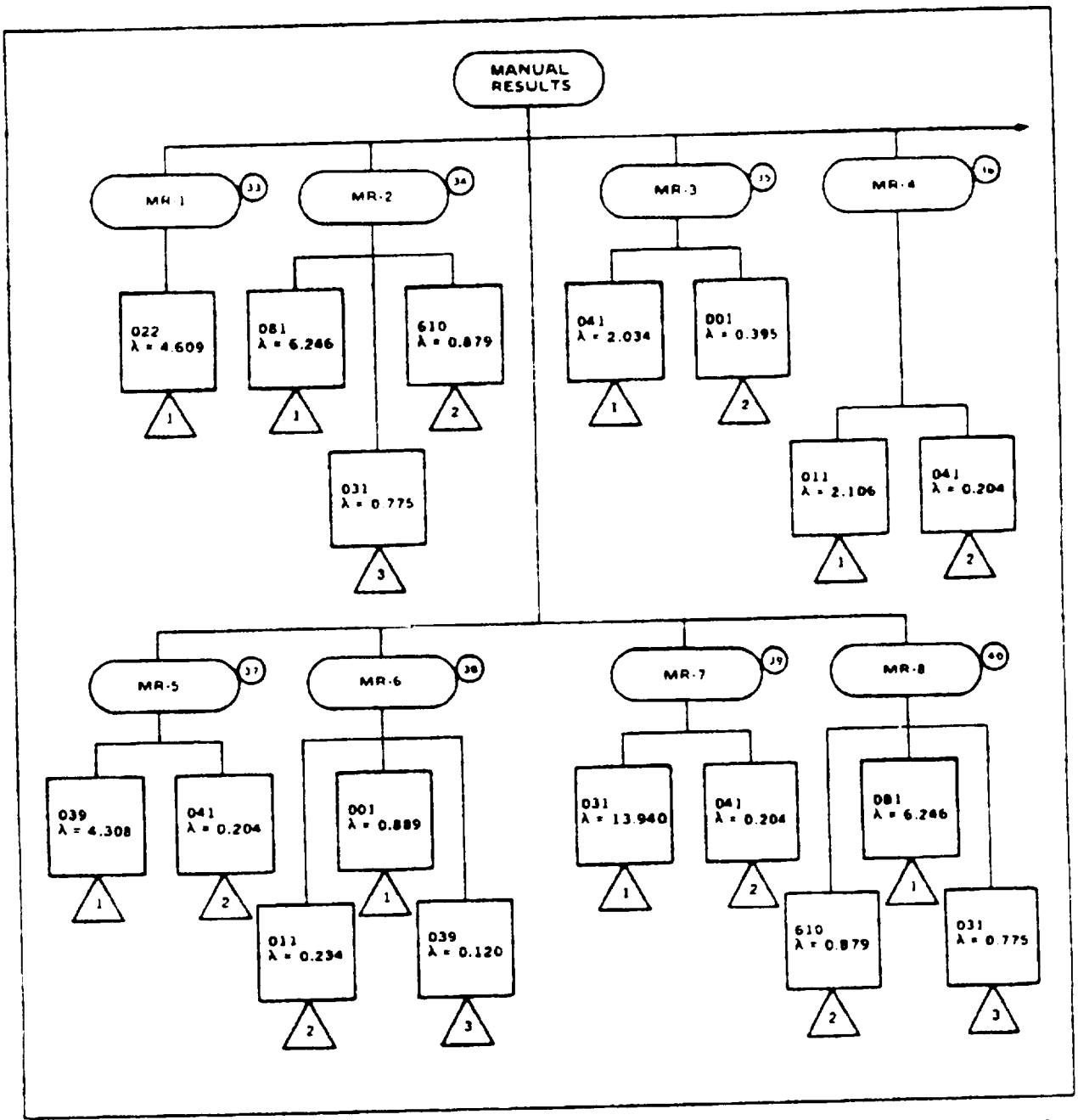

FIGURE V-7. Manual fault isolation output and RI correlation tree (partial).

Copyright Naval Air Systems Command
Provided by IHS
No reproduction or networking permitted without license from IHS
Licensee=NASA Technical Standards 4/9972545004, User=Aziz, Syed
Not for Resale, 05/31/2015 16:29:48 MDT

The MFD (as illustrated in Figure V-8) starts on the left side of the figures as a "Failure Occurs and is Detected" event. If isolation is inherent in fault detection, the next item shown in the MFD is the unique FD&I outputs. If isolation is not inherent in detection, the next item in the MFD is the fault detection output. This would be followed by activity blocks which define the procedure followed to achieve fault isolation. The activity block(s) is followed by the unique primary FD&I outputs associated with the maintenance actions that have been executed.

Following the FD&I output symbols are shown the activities required for fault correction and repair verification.

If a FD&I output results in non-ambiguous maintenance (i.e., primary isolation to a single RI, or group RI replacement), then an "End" symbol will directly follow the fault correction and verification activities. If a FD&I output results in an ambiguous result, a verification decision block is shown after each verification activity (except the last). Any activity (e.g., clean-up) performed after a positive verification decision is shown in an activity block(s) between the decision block and the End symbol. Associated with each End symbol is a path identifier which uniquely identifies each path by RI and FD&I output. For example, the path associated with the second RI and FD&I Output #12 would be designated as 2, 12.

Care must be exercised to ensure that all possible maintenance actions that could be followed as a result of a FD&I output observation have been accounted for, especially those that result in Manual Fault Isolation.

The R_{nj} values are computed by adding the times associated with each activity block from the "Failure Occurs and is Detected" event to the "end" event for the subject (n, j) pair. Note that only the activity blocks have time associated with them. The time entered in the individual activity blocks is computed from a time line analysis prepared in accordance with paragraph 4.2.6. Elemental times entered in the time line analysis are extracted from the following sources in the order given:

a. Actual times experienced on the subject equipment.

b. Standard times from Appendix A.

c. Actual times experienced on similar equipment.

d. Other recognized time sources.

e. Engineering judgement.

In the establishment of the time line analyses, the number of maintainers must be considered. For example, if a given equipment has two technicians performing maintenance, one technician may perform disassembly to achieve access to the faulty RI while the second technician simultaneously performs other work. In the maintenance flow diagram, this would show as a single maintenance activity with the associated time being the elapsed clock time. If the parameter of interest was MMH/OH, instead of MTTR, then the time entered in the activity block would be the combined MMH in lieu of the elapsed time.

Copyright Naval Air Systems Command
Provided by IHS
No reproduction or networking permitted without license from IHS

Licensee=NASA Technical Standards 4/9972545004, User=Aziz, Syed
Not for Resale, 05/31/2015 16:29:48 MDT

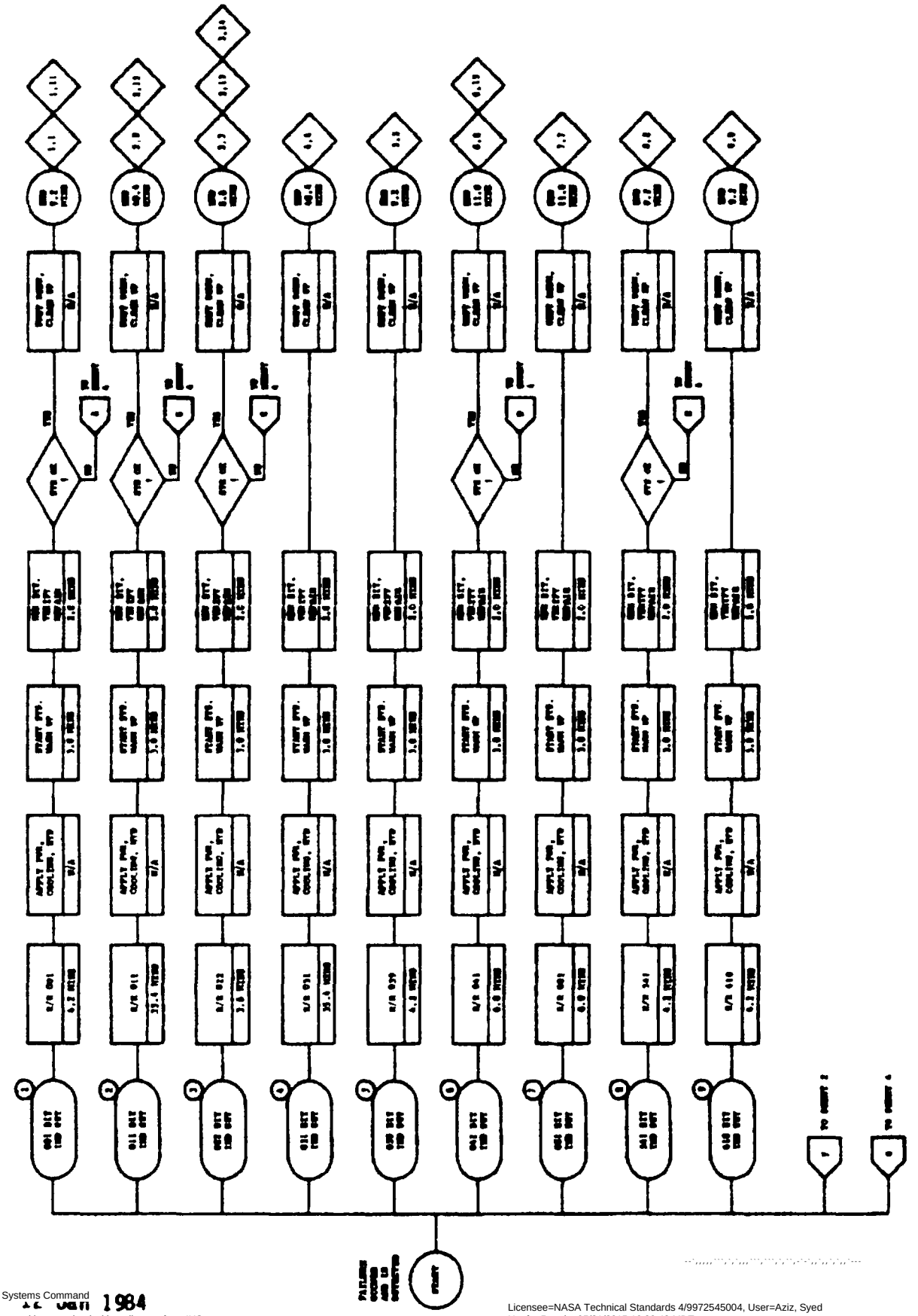

FIGURE V-8. Sample: Maintenance flow diagram.

Copyright Naval Air Systems Command 1984
Provided by IHS
No reproduction or networking permitted without license from IHS
Licensee=NASA Technical Standards 4/9972545004, User=Aziz, Syed
Not for Resale, 05/31/2015 16:29:48 MDT

4.2.6 Time line analysis. The estimated times used in the two prediction methodologies are synthesized using a time line analysis method. A time line analysis consists of computing the total elapsed time of a maintenance action by accounting for the time required to perform each step. The procedure for performing a time line analysis is as follows:

a. Identify each task that comprises the maintenance action.

b. Determine the time required to perform each task by either actual times, maintenance time standards, time studies, or engineering judgement.

c. Determine which actions can be done simultaneously if more than one maintainer is available.

d. Determine the overall time to perform the maintenance action by summing up the times to perform each action.

Figure V-9 is an example of how a time is synthesized for a simple physical task. The time associated with each task is extracted from the table of maintenance time standards shown in Table A-V-I in Appendix A.

RI NAME: MODULE (T/R) ELEMENT MAINTENANCE ACTION: INTERCHANGE

DESCRIPTION OF THE ELEMENTAL TASKS	TIME/ACTION	QTY	TOTAL TIME
REMOVE QUICK RELEASE COAX	0.04	4	0.16
REMOVE SLIDE LOCK CONNECTOR	0.09	1	0.09
REMOVE MODULE	0.09	1	0.09
REPLACE MODULE	0.11	1	0.11
REPLACE SLIDE LOCK CONNECTOR	0.12	1	0.12
REPLACE QUICK RELEASE COAX	0.04	4	0.16
	TOTAL TIME		0.73

FIGURE V-9 - EXAMPLE TIME SYNTHESIS ANALYSIS

Copyright Naval Air Systems Command
Provided by IHS
No reproduction or networking permitted without license from IHS

Licensee=NASA Technical Standards 4/9972545004, User=Aziz, Syed
Not for Resale, 05/31/2015 16:29:48 MDT

4.2.7 RI and FD&I output correlation. The results of the preceding section are summarized in a matrix which shows the relationship among the RIs for which the prediction is being performed and the total set of FD&I outputs. The matrix (Figure V-10) identifies the RIs across the top and the unique FD&I Outputs down the left column. In reference to the math models (refer to paragraph 3.2) the RIs are the "n" parameters and the FD&I outputs are the "j" parameters. Each RI column is further divided into three columns:

Q_{nj}, λ_{nj}, and R_{nj}

RI_n	1			2			3			4			5		
FD&I Outputs (j) / λ_n	λ_1			λ_2			λ_3			λ_4			λ_5		
	Q_{1j}	λ_{1j}	R_{1j}	Q_{2j}	λ_{2j}	R_{2j}	Q_{3j}	λ_{3j}	R_{3j}	Q_{4j}	λ_{4j}	R_{4j}	Q_{5j}	λ_{5j}	R_{5j}
1															
2															
3															
4															
5															
6															
o															
o															
o															

FIGURE V-10. Maintenance correlation matrix format.

Under each RI column, enter the failure rate (λ_{nj}) of the RI (obtained from the FD&I correlation tree) (see Figure V-6) that is associated with each FD&I output. For each unique output which has only one RI associated with it, enter a 1 in the Q_{nj} column for that combination. For those outputs which are associated with 2 or more RIs, the Q_{nj} value is determined by the replacement concept. If the replacement concept is group RI replacement, enter under Q_{nj} the number of RIs associated with each output. For example, if three RIs could contribute to the same FD&I output, then a 3 is entered

Copyright Naval Air Systems Command 1984
Provided by IHS
No reproduction or networking permitted without license from IHS

Licensee=NASA Technical Standards 4/9972545004, User=Aziz, Syed
Not for Resale, 05/31/2015 16:29:48 MDT

in the Q_{nj} for each of those RIs. If the replacement concept is iterative replacement, then Q_{nj} is assigned based on the order of replacement. That is, the first RI to be replaced upon recognition of the subject FD&I output is designated as $Q_{nj} = 1$, the second $Q_{nj} = 2$ and so forth. In cases of interative replacement, the values for each Q_{nj} is based on the relative failure rates of the RIs, with the highest failure rate RI assigned as the first replacement item.

4.2.8 Compute maintainability parameters. Once the MFD and Maintenance Correlation Matrix have been completed, compute the maintainability parameter(s) using the equations in section 3.

Copyright Naval Air Systems Command
Provided by IHS
No reproduction or networking permitted without license from IHS

Licensee=NASA Technical Standards 4/9972545004, User=Aziz, Syed
Not for Resale, 05/31/2015 16:29:48 MDT

Copyright Naval Air Systems Command
Provided by IHS
No reproduction or networking permitted without license from IHS

Licensee=NASA Technical Standards 4/9972545004, User=Aziz, Syed
Not for Resale, 05/31/2015 16:29:48 MDT

APPENDIX A
TIME STANDARDS

10. The time standards are tabulated in Table A-V-I. The times tabulated in Table A-V-I have corresponding figures referenced which illustrate what each time represents. Table A-V-II contains composite times of common maintenance actions that may occur. Columns two and four of Table A-V-II denote which times of Table A-V-I were used to synthesize each activity (letters denote removal (A) and replaceable (B) times).

20. Other maintenance tasks can easily be synthesized by the following method (for an example, see Figure V-9, in paragraph 4.2.6).

a. List the actions involved for the maintenance task.

b. Obtain the times for each action by using Table A-V-I (times that are not listed should be established either by actual data, time studies, or engineering judgement).

c. Compute the time by summing up each individual time.

Copyright Naval Air Systems Command
Provided by IHS
No reproduction or networking permitted without license from IHS

Licensee=NASA Technical Standards 4/9972545004, User=Aziz, Syed
Not for Resale, 05/31/2015 16:29:48 MDT

TABLE A-V-I. Elemental maintenance actions.

Time Standard Number	Description	Standard Times			Reference Figure
		Remove (min.)	Replace (min.)	Interchange (min.)	
	FASTENERS				
1	Standard Screws	0.16	0.26	0.42	A-V-1
2	Hex or Allen Type Screws	0.17	0.43	0.60	A-V-2
3	Captive Screws	0.15	0.20	0.35	A-V-3
4	Dzus (1/4 Turnlock)	0.08	0.05	0.13	A-V-4
5	Tridair Fasteners	0.06	0.06	0.12	A-V-5
6	Thumbscrews	0.06	0.08	0.14	A-V-6
7	Machine Screws	0.21	0.46	0.67	A-V-7
8	Nuts or Bolts	0.34	0.44	0.78	A-V-8
9	Retaining Rings	NA	0.27	NA	A-V-9
	LATCHES				
10	Drawhook	0.03	0.03	0.06	A-V-10
11	Spring Clip	0.04	0.03	0.07	A-V-11
12	Butterfly	0.05	0.05	0.10	A-V-12
13	ATR (spring loaded, pair)	0.45	0.69	1.14	A-V-13
14	Lift & Turn	0.03	0.04	0.07	A-V-14
15	Slide Lock	NA	NA	NA	A-V-15
	TERMINAL CONNECTIONS				
16	Terminal Posts (per lead)	0.22	0.64		A-V-16
17	Screw Terminals	0.23	0.45	0.68	A-V-17
18	Termipoint	0.22	0.30		A-V-18
19	Wirewrap	0.09	0.24		A-V-19
20	Taperpin	0.07	0.07	0.14	A-V-20

Copyright Naval Air Systems Command
Provided by IHS
No reproduction or networking permitted without license from IHS

Licensee=NASA Technical Standards 4/9972545004, User=Aziz, Syed
Not for Resale, 05/31/2015 16:29:48 MDT

TABLE A-V-I. Elemental maintenance actions (continued).

Time Standard Number	Description	Standard Times			Reference Figure
		Remove (min.)	Replace (min.)	Interchange (min.)	
	TERMINAL CONNECTIONS (cont.)				
21	PCB a) Discretes	0.14	0.17		A-V-21
22	b) Flatpacks	0.14 per lead	0.13 per flatpack		A-V-21
	c) DIP ICs				
23	• 8 pin	0.46	0.52		A-V-21
24	• 14 & 16 pin	0.90	0.86		A-V-21
	CONNECTORS				
25	BNC (single pin)	0.07	0.10	0.17	A-V-22
26	BNC (multi pin)	0.07	0.12	0.19	A-V-22
27	Quick Release Coax	0.04	0.04	0.08	A-V-23
28	Friction Locking	NA	NA	NA	A-V-24
29	Friction Locking with one Jack Screw	0.18	0.20	0.38	A-V-25
30	Thread Locking	0.09	0.17	0.26	A-V-26
31	Slide Locking	0.09	0.12	0.21	A-V-27
	PLUG IN MODULES				
32	DIP ICs (into DIP sockets)	0.07	0.14	0.21	A-V-28
	CCAs (without tool) (guided)				
	• 40 pin	NA	NA	NA	A-V-29
33	• 80 pin	0.04	0.07	0.11	A-V-29
	CCAs (with tool) (guided)				
34	• 40 pin	0.06	0.07	0.13	A-V-30
35	• 80 pin	0.09	0.08	0.17	A-V-30

Copyright Naval Air Systems Command
Provided by IHS
No reproduction or networking permitted without license from IHS

Licensee=NASA Technical Standards 4/9972545004, User=Aziz, Syed
Not for Resale, 05/31/2015 16:29:48 MDT

TABLE A-V-I. Elemental maintenance actions (continued).

Time Standard Number	Description	Standard Time			Reference Figure
		Remove (min)	Replace (min.)	Interchange (min.)	
	PLUG IN MODULES (cont.)				
	CCAs (without tool) (not guided)				
	• 40 pin	NA	NA	NA	A-V-31
36	• 80 pin	0.04	0.16	0.20	A-V-31
37	Modules	0.09	0.11	0.20	A-V-32
	MISCELLANEOUS				
38	Strip Wire	–	–	0.10	–
39	Cut Wire of Sleeving	–	–	0.04	–
40	Dress Wire with Sleeving	–	–	0.21	–
41	Crimp Lugs	–	–	0.27	A-V-33
42	Form Leads (per lead)	–	–	0.03	A-V-34
43	Trim Leads (per lead)	–	–	0.03	–
44	Adhesives	0.55	0.13	0.68	–
45	Conformal Coating	2.20	0.23	2.43	–
46	Soldering A) Terminal Posts	–	–	0.22	A-V-35
47	B) PCB	–	–	0.06	A-V-36
48	Reflow Soldering	–	–	0.25	–
49	Tinning Flatpacks (dipping)	–	–	0.30	–
50	Desoldering A) Braided Wick	–	–	0.16	A-V-37
51	B) Solder Sucker	–	–	0.09	A-V-38
52	Form Flatpack Leads (Mechanically)	–	–	0.11	A-V-39
53	Clean Surface	–	–	0.29	–
54	Panels, Doors, & Covers	0.04	0.03	0.07	A-V-40

Copyright Naval Air Systems Command
Provided by IHS
No reproduction or networking permitted without license from IHS

Licensee=NASA Technical Standards 4/9972545004, User=Aziz, Syed
Not for Resale, 05/31/2015 16:29:48 MDT

TABLE A-V-I. Elemental maintenance actions (continued).

Time Standard Number	Description	Standard Time			Reference Figure
		Remove (min.)	Replace (min.)	Interchange (min.)	
	MISCELLANEOUS (cont.)				
55	Drawers (Large)	0.09	0.10	0.19	A-V-41
56	Display Lamps	0.10	0.11	0.21	A-V-42
57	Threaded Connector Covers	0.11	0.14	0.25	-

NOTE: Data obtained from RADC-TR-70-89, Maintainability Prediction and Demonstration Techniques

Copyright Naval Air Systems Command
Provided by IHS
No reproduction or networking permitted without license from IHS

Licensee=NASA Technical Standards 4/9972545004, User=Aziz, Syed
Not for Resale, 05/31/2015 16:29:48 MDT

Copyright Naval Air Systems Command
Provided by IHS
No reproduction or networking permitted without license from IHS

TABLE A-V-II. Common maintenance tasks.

Description	Elements of Removal*	Remove (min.)	Elements of Replacement*	Replace (min.)	Interchange (min.)
1. R/R of transistor from a PCB	50(3), 21A(3), 53	1.19	42(3), 21B(3), 47(3), 43(3), 53	1.16	2.35
2. R/R of a transistor from terminal posts	50(3), 16A(3), 53	1.43	42(3), 16B(3), 43(3), 46(3), 53	3.05	4.48
3. R/R of an axial component from a PCB	50(2), 21A(2), 53	0.89	42(2), 21B(2), 47(2), 43(2), 53	0.87	1.76
4. R/R of an axial component from terminal posts	50(2), 16A(2), 53	1.05	42(2), 16B(2), 43(2), 46(2), 53	1.69	2.74
5. R/R of a radial component from a PCB	50(2), 21A(2), 53	0.89	21B(2), 43(2), 47(2), 53	0.81	1.70
6. R/R of a radial component from terminal posts	50(2), 16A(2), 53	1.05	42(2), 16B(2), 43(2), 46(2), 53	1.69	2.74
7. R/R of a termi-point connection	18A	0.22	39, 20B	0.34	0.56
8. R/R of a wirewrap connection	19A	0.09	39, 38, 19B	0.38	0.47
9. R/R of a 16 pin IC from a PCB	50(16), 24A, 53	3.75	24B, 47(16), 43(16), 53	2.59	6.34
10. R/R of a 16 pin flatpack	50(16), 22A(16), 53	5.09	49, 52, 22B, 48, 53	1.08	6.17
11. R/R an 8 pin IC from a PCB	50(8), 23A, 53	2.03	23B, 47(8), 43(8), 53	1.53	3.56

*Numbers in these columns pertain to the time standard numbers in Table A-V-I. A and B refer to removal and replacement times respectively. The number in parentheses refers to the quantity of each action. R/R = removal and replacement.

Licensee=NASA Technical Standards 4997254004, User=Aziz, Syed
Not for Resale, 05/31/2015 16:29:48 MDT

STANDARD SCREWS

- THIS TIME IS FOR ALL STANDARD THREADED FASTENERS SUCH AS, SLOTTED HEAD, PHILLIPS HEAD, AND FILLISTER HEAD
- THE TIME GIVEN IS THE TIME REQUIRED TO REMOVE/REPLACE THE FASTENER FROM THE HOLE AND DISENGAGE/OR ENGAGE IT BY SEVERAL TWISTING MOTIONS OF THE HAND (APPROXIMATELY 8 TWISTS)
- TOOL REQUIRED IS STANDARD SCREWDRIVER (FLAT HEAD, PHILLIPS, OR HEX)

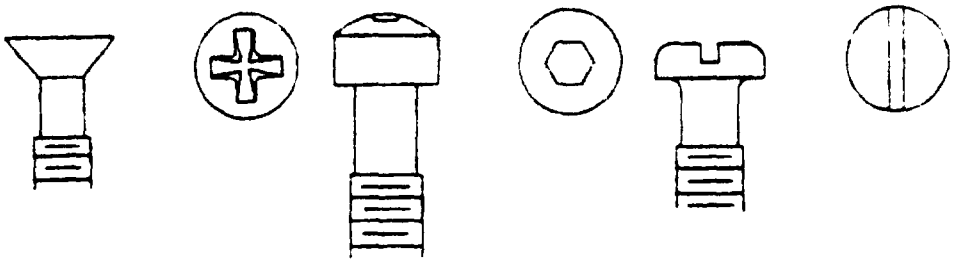

FIGURE A-V-1. Standard screws.

HEX OR ALLEN SET SCREWS

- THIS TIME IS FOR HEX OR ALLEN TYPE SET SCREWS
- THE TIME GIVEN IS FOR THE TIME TO TIGHTEN/OR LOOSEN A HEXAGONAL TYPE SET SCREW USING AN ALLEN TYPE WRENCH
- TOOLS REQUIRED ARE HEX WRENCHES OR ALLEN TYPE WRENCHES

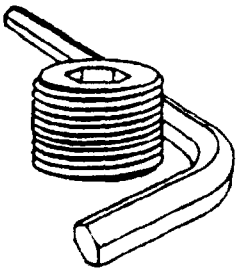

FIGURE A-V-2. Hex or Allen set screws.

Copyright Naval Air Systems Command
Provided by IHS
No reproduction or networking permitted without license from IHS

Licensee=NASA Technical Standards 4/9972545004, User=Aziz, Syed
Not for Resale, 05/31/2015 16:29:48 MDT

CAPTIVE SCREWS

- THIS IS THE TIME FOR STANDARD FASTENERS THAT ARE CAPTIVE TO THE PANEL/BRACKET THEY SECURE
- THE TIME GIVEN FOR THIS ACTION INCLUDES THE TIME TO ENGAGE/OR DISENGAGE THE FASTENER BY A SERIES OF TWISTING MOTIONS WITH THE HAND
- THE TOOL REQUIRED IS A STANDARD SCREWDRIVER (FLATHEAD, PHILLIPS OR HEX)

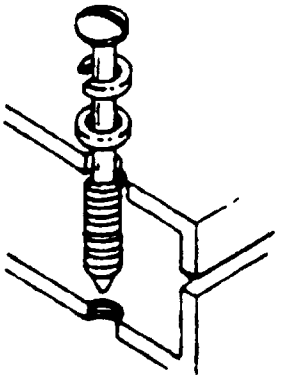

FIGURE A-V-3. Captive screws.

DZUS FASTENER

- THIS TIME IS FOR FASTENERS THAT REQUIRE ONLY A 1/4 TURN TO ENGAGE OR DISENGAGE (FASTENER IS CAPTIVE)
- THE TIME GIVEN IS THE TIME REQUIRED TO ENGAGE OR DISENGAGE THE FASTENER BY A 1/4 TWIST MOTION OF THE HAND
- THE TOOL REQUIRED IS A STANDARD SCREWDRIVER (FLATHEAD, PHILLIPS OR HEX)

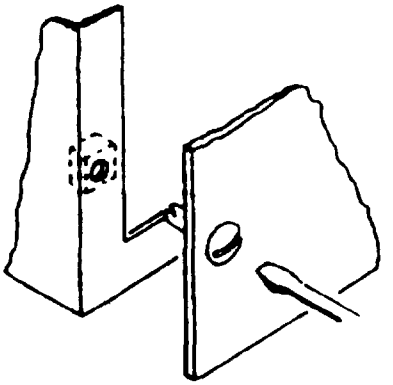

FIGURE A-V-4. DZUS fasteners.

Copyright Naval Air Systems Command
Provided by IHS
No reproduction or networking permitted without license from IHS

Licensee=NASA Technical Standards 4/9972545004, User=Aziz, Syed
Not for Resale, 05/31/2015 16:29:48 MDT

TRIDAIR FASTENER

- THIS FASTENER IS A QUICK ENGAGING FASTENER THAT REQUIRES LESS THAN ONE TURN
- THIS TIME INCLUDES THE TIME NECESSARY TO ENGAGE/OR DISENGAGE THE FASTENER USING A TURN OF THE HAND
- THE TOOL REQUIRED IS AN ALLEN WRENCH

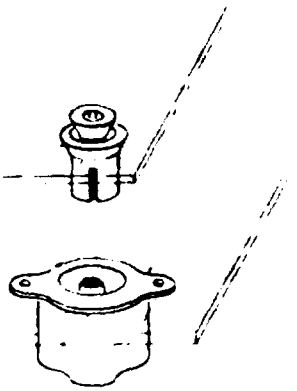

FIGURE A-V-5. Tridair fastener.

THUMBSCREWS

- THIS FASTENER IS A THREADED SCREW WITH A HEAD THAT CAN BE GRASPED EASILY BY THE HAND
- THIS TIME INCLUDES THE TIME NECESSARY TO DISENGAGE/OR ENGAGE THE FASTENER BY TURNING IT WITH THE HAND
- NO TOOLS REQUIRED

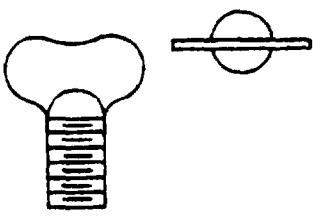

FIGURE A-V-6. Thumbscrews.

Copyright Naval Air Systems Command
Provided by IHS
No reproduction or networking permitted without license from IHS

Licensee=NASA Technical Standards 4/9972545004, User=Aziz, Syed
Not for Resale, 05/31/2015 16:29:48 MDT

MACHINE SCREWS (WITH NUT)

- THIS FASTENER IS ANY THREADED FASTENER THAT DOES NOT TAP INTO THE STRUCTURE. INSTEAD IT ENGAGES INTO A LOOSE NUT
- THIS TIME INCLUDES THE TIME TO REMOVE/OR POSITION THE FASTENER AND NUT AND THE TIME REQUIRED TO TIGHTEN THE FASTENER
- TOOLS REQUIRED ARE A SCREWDRIVER AND A WRENCH

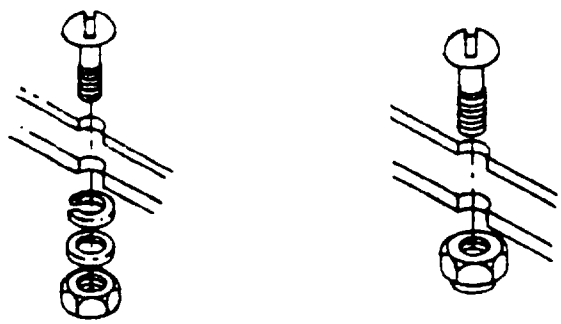

FIGURE A-V-7. Machine screws.

NUTS OR BOLTS

- ANY FASTENER THAT REQUIRES A WRENCH TO TIGHTEN IT DOWN
- THIS TIME INCLUDES THE TIME NECESSARY TO POSITION THE WRENCH AND ENGAGE/OR DISENGAGE THE FASTENER

FIGURE A-V-8. Nuts or bolts.

Copyright Naval Air Systems Command
Provided by IHS
No reproduction or networking permitted without license from IHS

Licensee=NASA Technical Standards 4/9972545004, User=Aziz, Syed
Not for Resale, 05/31/2015 16:29:48 MDT

RETAINING RINGS

- THIS DEVICE IS A "U" SHAPED PIECE OF METAL THAT RETAINS A UNIT/COMPONENT IN POSITION
- THE TIME GIVEN INCLUDES THE TIME NECESSARY TO ENGAGE/OR DISENGAGE THIS FASTENER
- SPECIAL PLIERS ARE REQUIRED TO REMOVE/REPLACE THIS FASTENER

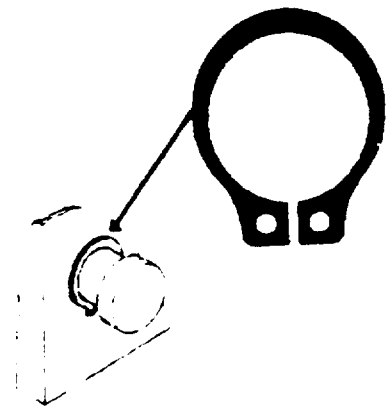

FIGURE A-V-9. Retaining rings.

DRAWHOOK LATCH

- ANY LATCH THAT IS SIMILAR TO THE ONE SHOWN
- THE TIME INCLUDES THE TIME TO ENGAGE/ DISENGAGE THE LATCH COMPLETELY
- NO TOOLS REQUIRED

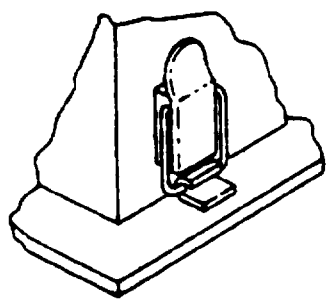

FIGURE A-V-10. Drawhook latch.

Copyright Naval Air Systems Command
Provided by IHS
No reproduction or networking permitted without license from IHS

Licensee=NASA Technical Standards 4/9972545004, User=Aziz, Syed
Not for Resale, 05/31/2015 16:29:48 MDT

SPRING CLIP CATCH

- ANY LATCH SIMILAR TO THE ONE SHOWN
- TIME INCLUDES THE TIME NECESSARY TO ENGAGE/OR DISENGAGE THE LATCH COMPLETELY
- NO TOOLS REQUIRED

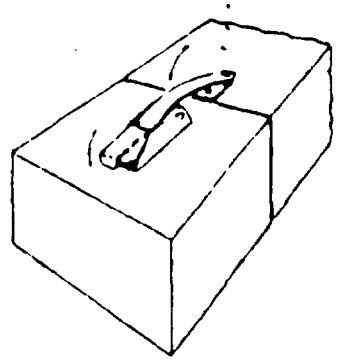

FIGURE A-V-11. Spring clip catch.

BUTTERFLY LATCH

- ANY LATCH SIMILAR TO THE ONE SHOWN
- TIME INCLUDES THE NECESSARY TIME TO ENGAGE/OR DISENGAGE THE LATCH COMPLETELY. NORMALLY CONSISTS OF LIFTING THE TAB AND TURNING IT 90°.
- NO TOOLS REQUIRED

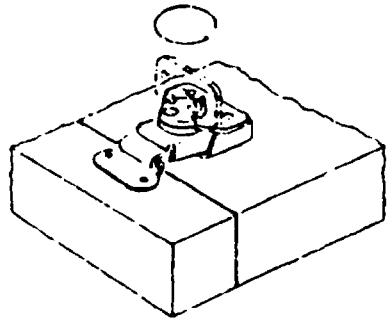

FIGURE A-V-12. Butterfly latch.

ATR LATCH

- ANY LATCH SIMILAR TO THE ONE SHOWN
- TIME INCLUDES THE TIME NECESSARY TO UNSCREW/OR SCREW THE CAP OVER THE NIB TO ENGAGE/OR DISENGAGE THE SECURED UNIT. THE TIME GIVEN IS FOR A PAIR OF ATR LATCHES.
- NO TOOLS REQUIRED.

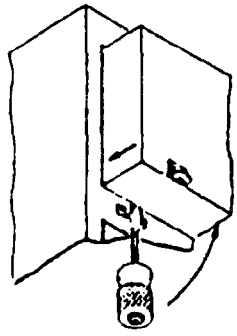

FIGURE A-V-13. ATR latch.

Copyright Naval Air Systems Command
Provided by IHS
No reproduction or networking permitted without license from IHS

Licensee=NASA Technical Standards 4/9972545004, User=Aziz, Syed
Not for Resale, 05/31/2015 16:29:48 MDT

LIFT AND TURN LATCH

- ANY LATCH SIMILAR TO THE ONE SHOWN
- TIME INCLUDES THE TIME NECESSARY TO LIFT THE HANDLE AND TURN IT TO UNSECURE OR SECURE A DOOR OR PANEL
- NO TOOLS REQUIRED

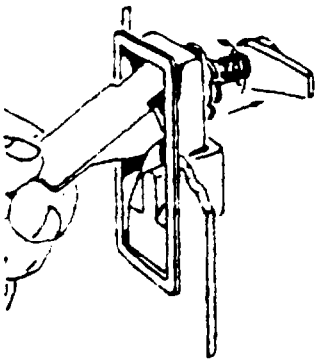

FIGURE A-V-14. Lift and turn latch.

SLIDE LOCK LATCH

- ANY LATCH SIMILAR TO THE ONE SHOWN
- THE TIME GIVEN IS THE TIME NECESSARY TO SLIDE THE LOCKING DEVICE TO ENGAGE/OR DISENGAGE THE PANEL
- NO TOOLS REQUIRED

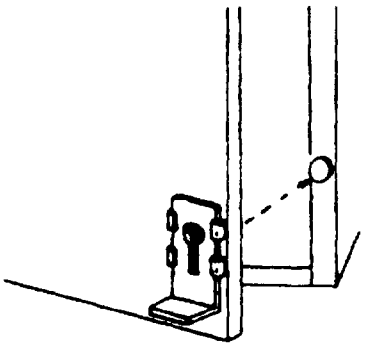

FIGURE A-V-15. Slide lock latch.

TERMINAL POSTS

- ANY TERMINAL CONNECTION SIMILAR TO THE ONES SHOWN
- THIS TIME IS THE TIME REQUIRED TO REMOVE OR REPLACE A LEAD FROM A TERMINAL (DOES NOT INCLUDE SOLDERING OR DESOLDERING)
- NEEDLE NOSE PLIERS ARE REQUIRED FOR THIS TASK

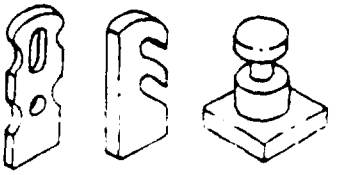

FIGURE A-V-16. Terminal posts connections.

Copyright Naval Air Systems Command
Provided by IHS
No reproduction or networking permitted without license from IHS

Licensee=NASA Technical Standards 4/9972545004, User=Aziz, Syed
Not for Resale, 05/31/2015 16:29:48 MDT

SCREW TERMINALS

- ANY TERMINAL CONNECTION SIMILAR TO THE ONE SHOWN
- THE TIME GIVEN IS THE TIME REQUIRED TO REMOVE/OR POSITION THE TERMINAL LUG AND LOOSEN/OR TIGHTEN THE SCREW
- A SCREWDRIVER IS REQUIRED

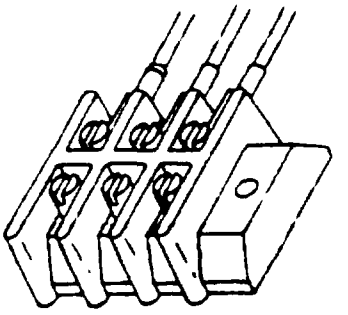

FIGURE A-V-17. Screw terminal connections.

TERMIPOINT CONNECTIONS

- ANY TERMIANL CONNECTION SIMILAR TO THE ONE SHOWN
- THIS TIME IS THE TIME TO REMOVE THE CLIP WITH A PICK OR TWEEZERS AND THE TIME TO REPLACE THE CLIP WITH A TERMIPOINT GUN
- TOOLS REQUIRED ARE TWEEZERS, OR A PICK, AND A TERMIPOINT GUN

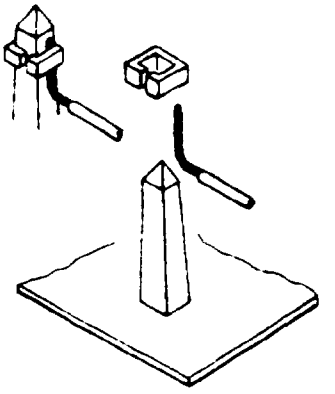

FIGURE A-V-18. Termipoint connection.

Copyright Naval Air Systems Command
Provided by IHS
No reproduction or networking permitted without license from IHS

Licensee=NASA Technical Standards 4/9972545004, User=Aziz, Syed
Not for Resale, 05/31/2015 16:29:48 MDT

WIREWRAP

- ANY TERMINAL CONNECTION SIMILAR TO THE ONE SHOWN
- THE TIMES GIVEN ARE TO REPLACE THE WIREWRAP WITH A WIREWRAP GUN AND TO REMOVE THE CONNECTION WITH AN UNWRAPPING TOOL
- TOOLS REQUIRED ARE A WIREWRAP GUN AND AN UNWRAPPING TOOL

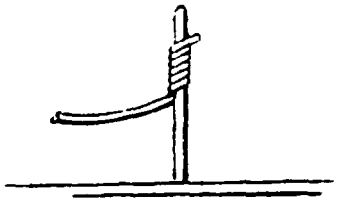

FIGURE A-V-19. Wirewrap connection.

TAPERPIN

- ANY TERMINAL CONNECTION SIMILAR TO THE ONE SHOWN
- THE TIME GIVEN IS THE TIME REQUIRED TO UNPLUG MATE OR DEMATE THE CONNECTOR
- NO TOOL REQUIRED

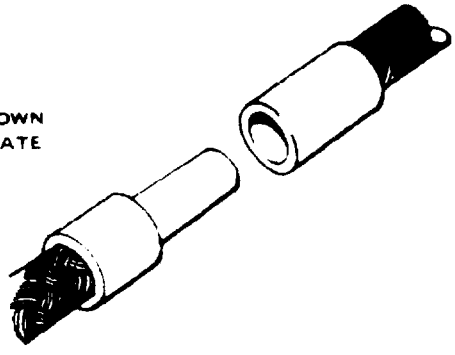

FIGURE A-V-20. Taperpin connection.

PCB

- ANY TERMINAL CONNECTED DIRECTLY TO THE PRINTED CIRCUITRY OF A CIRCUIT CARD
- THE TIME GIVEN IS THE TIME REQUIRED TO REMOVE OR REPLACE A LEAD FROM THE PCB (NO SOLDERING OR DESOLDERING TIME)
- THE TOOLS REQUIRED ARE A PICK OR NEEDLENOSE PLIERS

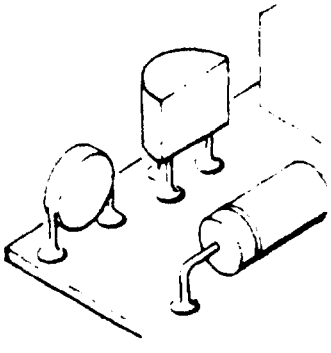

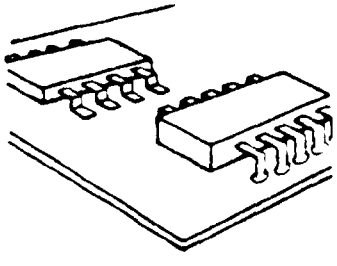

FIGURE A-V-21. PCB connections.

Copyright Naval Air Systems Command
Provided by IHS
No reproduction or networking permitted without license from IHS

Licensee=NASA Technical Standards 4/9972545004, User=Aziz, Syed
Not for Resale, 05/31/2015 16:29:48 MDT

BNC CONNECTORS

- ANY CONNECTOR THAT HAS A BAYONET LOOKING DEVICE
- TIMES GIVEN ARE FOR MATING/DEMATING THE CONNECTORS BY A TWISTING MOTION
- NO TOOLS REQUIRED

FIGURE A-V-22. BNC connectors.

QUICK RELEASE COAX CONNECTORS

- ANY COAX CONNECTOR THAT ENGAGES OR DISENGAGES BY A PUSH OR PULL MOTION
- TIMES GIVEN ARE FOR DEMATING/MATING THE CONNECTORS BY A PULLING OR PUSHING MOTION
- NO TOOLS REQUIRED

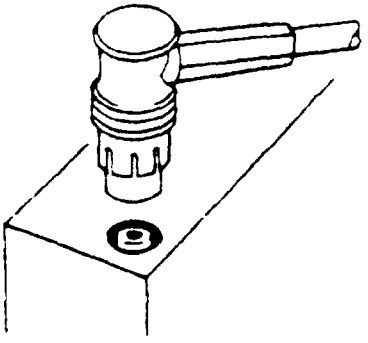

FIGURE A-V-23. Quick release coax connectors.

FRICTION LOCKING CONNECTORS

- ANY CONNECTOR THAT IS MATED AND SECURED BY THE FRICTION OF THE PINS AND/OR CONNECTOR CASE
- THE TIME GIVEN IS THE TIME NECESSARY TO MATE OR DEMATE THESE CONNECTOR TYPES
- NO TOOLS REQUIRED

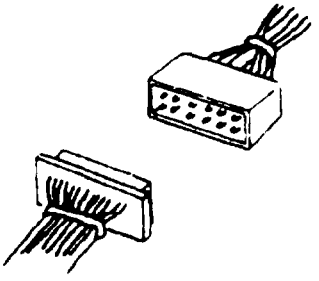

FIGURE A-V-24. Friction locking connector.

Copyright Naval Air Systems Command
Provided by IHS
No reproduction or networking permitted without license from IHS

Licensee=NASA Technical Standards 4/9972545004, User=Aziz, Syed
Not for Resale, 05/31/2015 16:29:48 MDT

FRICTION LOCKING CONNECTOR WITH JACKSCREW

- ANY FRICTION LOCKING CONNECTOR THAT IS SECURED BY A JACKSCREW
- THE TIME GIVEN IS THE TIME NECESSARY TO DEMATE/MATE THE CONNECTOR BY DISENGAGING/ENGAGING THE JACK SCREW
- A SCREWDRIVER IS REQUIRED

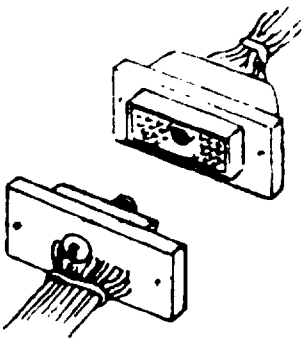

FIGURE A-V-25. Friction locking connector with jackscrew.

THREADLOCKING CONNECTOR

- ANY CONNECTOR THAT IS SECURED BY A THREADED CONNECTOR SHELL
- THE TIME GIVEN IS FOR THE DEMATING/MATING OF THE CONNECTOR AND THE SECURING/UNSECURING OF IT BY A TURNING MOTION
- NO TOOLS REQUIRED

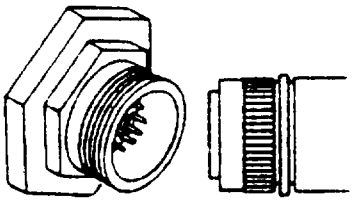

FIGURE A-V-26. Threadlocking connector.

SLIDE LOCKING CONNECTOR

- ANY CONNECTOR THAT IS SECURED BY A SLIDE LOCK
- THE TIME GIVEN IS THE TIME REQUIRED TO MATE/DEMATE THE CONNECTOR AND ENGAGE/DISENGAGE THE SLIDE LOCK
- NO TOOLS REQUIRED

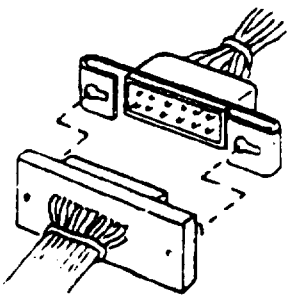

FIGURE A-V-27. Slide locking connector.

Copyright Naval Air Systems Command
Provided by IHS
No reproduction or networking permitted without license from IHS
Licensee=NASA Technical Standards 4/9972545004, User=Aziz, Syed
Not for Resale, 05/31/2015 16:29:48 MDT

DIP ICs

- THIS INCLUDES ANY DIP IC THAT IS SECURED IN A DIP SOCKET
- THE TIME GIVEN IS THE TIME REQUIRED TO UNPLUG OR PLUG IN THE DIP IC
- NO TOOLS REQUIRED

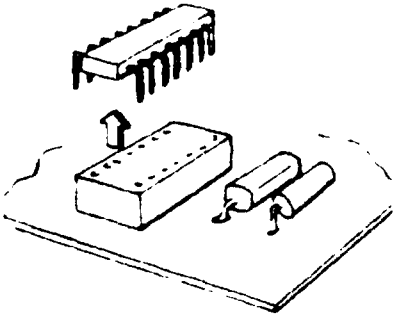

FIGURE A-V-28. Dip ICs.

GUIDED CCAs

- ANY GUIDED CCA THAT IS INSERTED/REMOVED BY HAND
- THE TIME GIVEN IS THE TIME TO PULL OUT OR PUSH IN THE CCA
- NO TOOLS REQUIRED

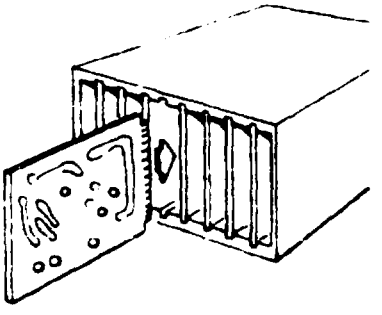

FIGURE A-V-29. Guided CCAs.

GUIDED CCAs WITH A TOOL

- THIS TIME IS ASSOCIATED WITH ANY CCA THAT IS INSERTED/REMOVED WITH A CARD EXTRACTING TOOL
- THIS TIME INCLUDES THE TIME REQUIRED TO POSITION THE TOOL AND REMOVE/REPLACE THE CCA
- A CARD EXTRACTING TOOL IS REQUIRED

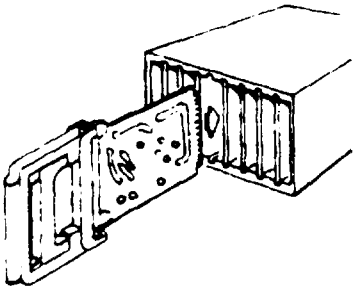

FIGURE A-V-30. Guided CCAs with a tool.

Copyright Naval Air Systems Command
Provided by IHS
No reproduction or networking permitted without license from IHS

Licensee=NASA Technical Standards 4/9972545004, User=Aziz, Syed
Not for Resale, 05/31/2015 16:29:48 MDT

NON-GUIDED CCAs

- THIS TIME IS ASSOCIATED WITH PLUG-IN CARDS THAT ARE NOT GUIDED
- THIS TIME INCLUDES THE TIME NECESSARY TO REMOVE/REPLACE THE CCA FROM THE EDGE CONNECTOR (DOES NOT INCLUDE TIME FOR FASTENERS)
- NO TOOLS REQUIRED

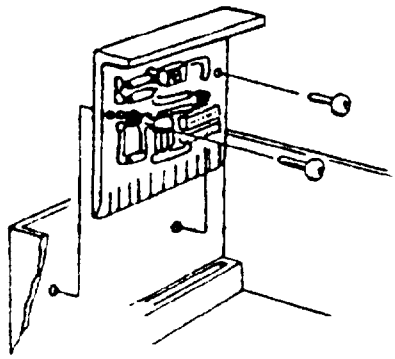

FIGURE A-V-31. Non-guided CCAs.

MODULES

- THIS IS THE TIME ASSOCIATED WITH REMOVING OR POSITIONING A MODULAR ASSEMBLY
- THIS TIME IS THE TIME NECESSARY TO REMOVE THE MODULE OR POSITION IT IN PLACE
- NO TOOLS REQUIRED

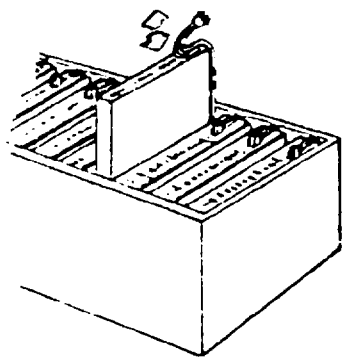

FIGURE A-V-32. Modules.

CRIMP LUGS

- THIS IS THE TIME ASSOCIATED WITH SECURING A TERMINAL LUG TO A WIRE
- THE TIME GIVEN INCLUDES THE TIME TO POSITION THE WIRE IN THE LUG AND CRIMP IT
- A CRIMPING TOOL IS REQUIRED

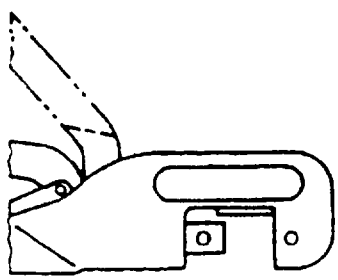

FIGURE A-V-33. Crimp lugs.

Copyright Naval Air Systems Command
Provided by IHS
No reproduction or networking permitted without license from IHS

Licensee=NASA Technical Standards 4/9972545004, User=Aziz, Syed
Not for Resale, 05/31/2015 16:29:48 MDT

FORM LEADS

- THIS IS THE TIME ASSOCIATED WITH FORMING A LEAD ON A COMPONENT PRIOR TO CONNECTING IT TO A TERMINAL
- THE TIME GIVEN IS THE TIME NECESSARY TO GRASP THE LEAD WITH THE PLIERS AND FORM IT
- NEEDLE NOSE PLIERS ARE REQUIRED

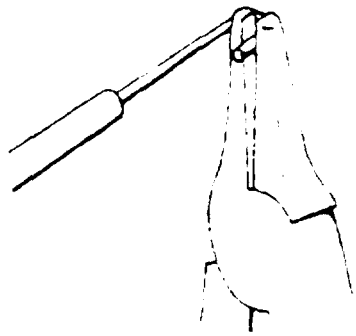

FIGURE A-V-34. Form leads.

SOLDERING TERMINAL POSTS

- THE TIME ASSOCIATED WITH SOLDERING A LEAD TO A TERMINAL POST
- THE TIME GIVEN IS THE TIME TO HEAT THE TERMINAL POST AND APPLY THE SOLDER
- A SOLDERING IRON IS REQUIRED

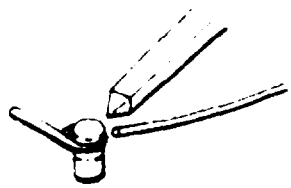

FIGURE A-V-35. Soldering terminal posts.

SOLDERING PCB CONNECTIONS

- THE TIME ASSOCIATED WITH SOLDERING A LEAD TO A PCB ETCHING
- THE TIME GIVEN IS THE TIME TO HEAT THE ETCHING PAD AND APPLY THE SOLDER
- A SOLDERING IRON IS REQUIRED

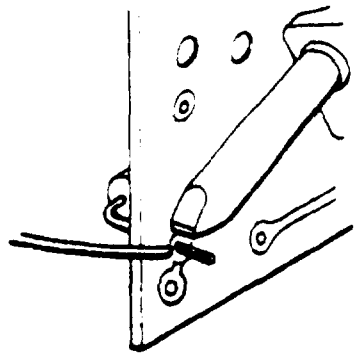

FIGURE A-V-36. Soldering PCB connections.

Copyright Naval Air Systems Command 1984
Provided by IHS
No reproduction or networking permitted without license from IHS

Licensee=NASA Technical Standards 4/9972545004, User=Aziz, Syed
Not for Resale, 05/31/2015 16:29:48 MDT

DESOLDERING USING A BRAIDED WICK

- THE TIME ASSOCIATED WITH DESOLDERING A CONNECTION USING A BRAIDED COPPER WICK
- THE TIME GIVEN IS THE TIME TO REHEAT THE SOLDER AND EXTRACT IT FROM THE PCB OR TERMINAL USING A BRAIDED COPPER WICK
- A SOLDERING IRON AND BRAIDED COPPER WICK ARE REQUIRED

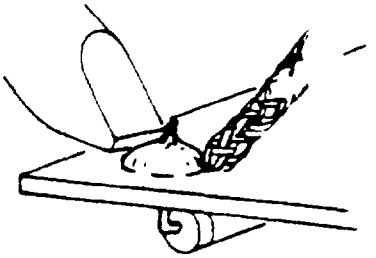

FIGURE A-V-37. Desoldering with a braided wick.

DESOLDERING USING A VACUUM

- THE TIME ASSOCIATED WITH DESOLDERING A CONNECTION USING A VACUUM ASSISTED DESOLDERING IRON
- THE TIME GIVEN IS THE TIME REQUIRED TO REHEAT AND "SUCK-UP" THE SOLDER
- A DESOLDERING IRON IS REQUIRED

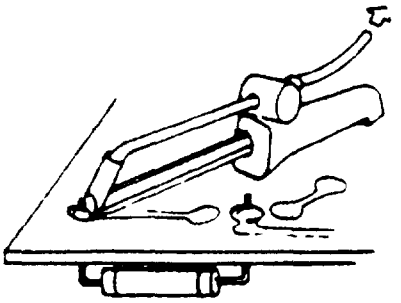

FIGURE A-V-38. Desoldering using a vacuum.

FORM FLAT PACK LEADS

- THE TIME ASSOCIATED WITH FORMING FLATPACK LEADS USING A MECHANICALLY OPERATED DIE
- THE TIME GIVEN IS THE TIME REQUIRED TO POSITION THE FLATPACK AND ACTUATE THE MECHANISM
- A MECHANICALLY OPERATED DEVICE IS USED TO DO THIS

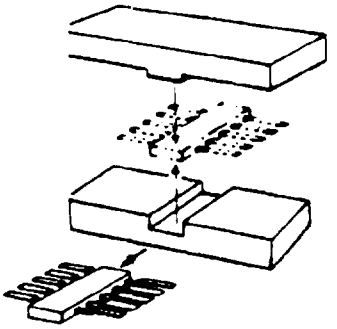

FIGURE A-V-39. Form flat pack leads.

Copyright Naval Air Systems Command
Provided by IHS
No reproduction or networking permitted without license from IHS

Licensee=NASA Technical Standards 4/9972545004, User=Aziz, Syed
Not for Resale, 05/31/2015 16:29:48 MDT

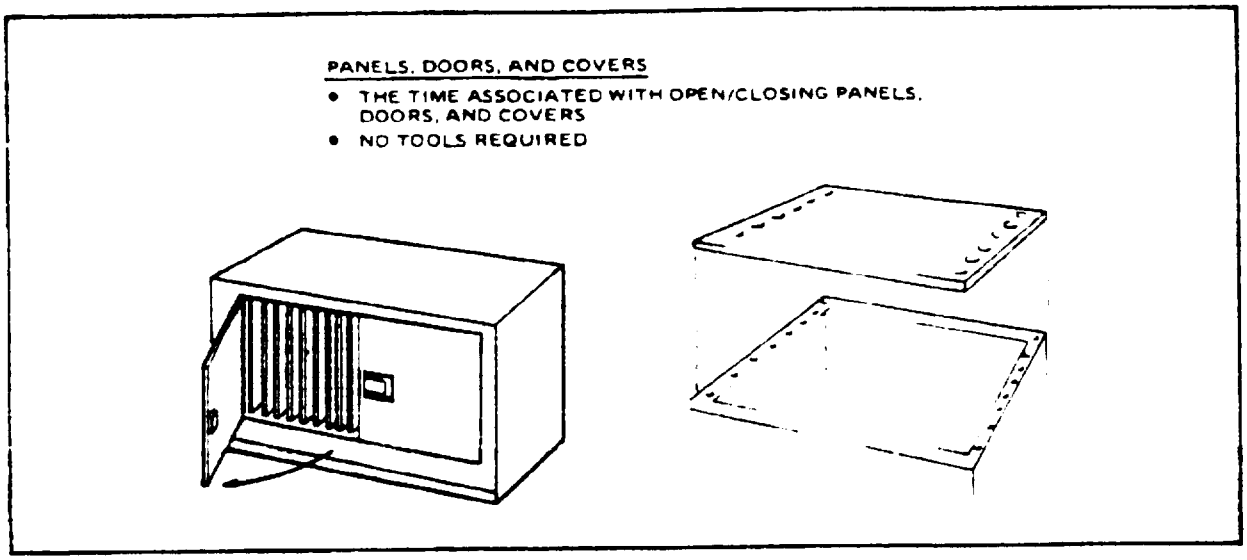

FIGURE A-V-40. Panels, doors and covers.

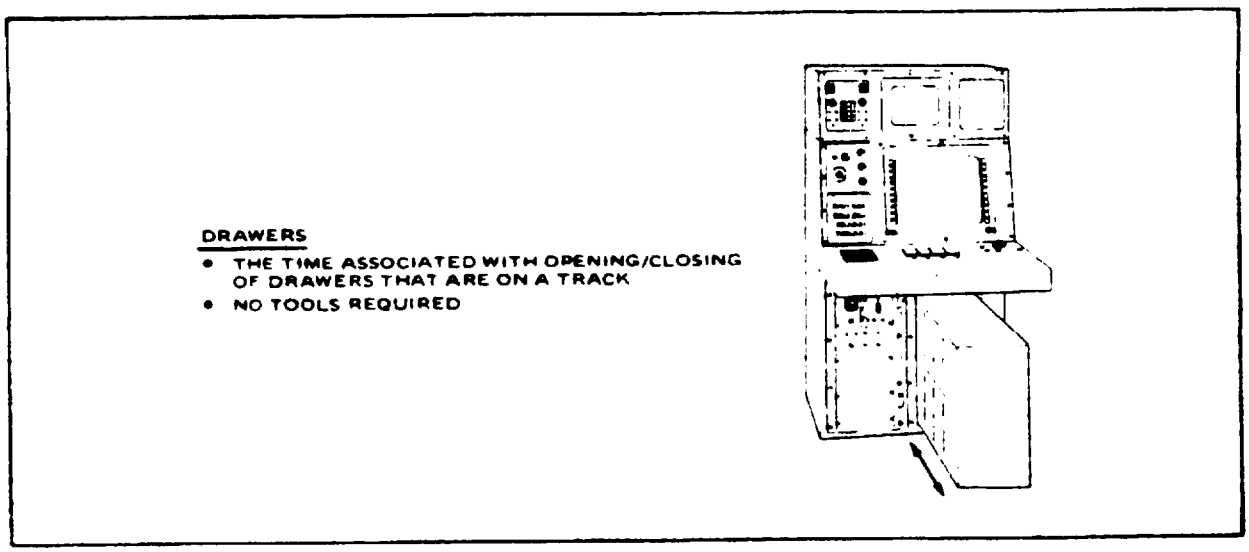

FIGURE A-V-41. Drawers.

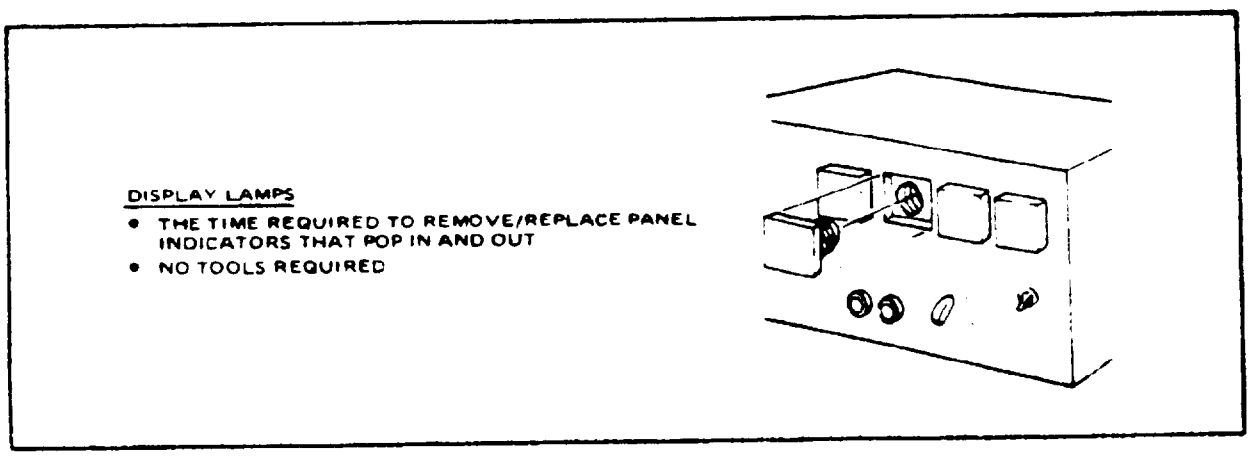

FIGURE A-V-42. Display lamps.

Copyright Naval Air Systems Command
Provided by IHS
No reproduction or networking permitted without license from IHS
Licensee=NASA Technical Standards 4/9972545004, User=Aziz, Syed
Not for Resale, 05/31/2015 16:29:48 MDT

APPENDIX B

ESTIMATES OF M_{max} (Φ) FOR LOGNORMAL REPAIR DISTRIBUTIONS

10. This appendix provides estimates of M_{max} (Φ) for lognormally distributed repair times. The estimates for M_{max} (Φ) are tabulated in Tables B-V-I and B-V-II. The M_{max} (Φ) values are found by:

a. Selecting the percentile of interest (Φ) either 60, 70, 80, 90, 95, or 99 percent.

b. Locate the mean repair time (MEAN) which most closely approximates the MTTR of the equipment/system in question The repair times are provided from 0.1 to 2.6 in steps of 0.1.

c. Locate the corresponding repair times standard deviation (SIGMA) which is estimated for the subject equipment/system. Values are provided from 0.1 to 2.5 in steps of 0.1.

d. Read the value of M_{max} (Φ) under the appropriate percentile column.

Copyright Naval Air Systems Command
Provided by IHS
No reproduction or networking permitted without license from IHS

Licensee=NASA Technical Standards 4/9972545004, User=Aziz, Syed
Not for Resale, 05/31/2015 16:29:48 MDT

TABLE B-V-1.

60th, 70th and 80th percentiles of the lognormal distribution for means and sigmas from .1 to 2.5.

MEAN	SIGMA	60 PERCENT	70 PERCENT	80 PERCENT
.1	.1	.087315	.109419	.142493
.1	.2	.061674	.086984	.130081
.1	.3	.044447	.070073	.113406
.1	.4	.037152	.058630	.100002
.1	.5	.030983	.050535	.089592
.1	.6	.026606	.044532	.081369
.1	.7	.023342	.039899	.074723
.1	.8	.020814	.036212	.069236
.1	.9	.018796	.033203	.064622
.1	1.0	.017148	.030697	.060682
.1	1.1	.015775	.028575	.057273
.1	1.2	.014614	.026754	.054290
.1	1.3	.013618	.025171	.051654
.1	1.4	.012755	.023782	.049306
.1	1.5	.011998	.022552	.047199
.1	1.6	.011330	.021454	.045295
.1	1.7	.010735	.020469	.043565
.1	1.8	.010202	.019576	.041985
.1	1.9	.009721	.018769	.040536
.1	2.0	.009286	.018030	.039201
.1	2.1	.008889	.017353	.037966
.1	2.2	.008526	.016729	.036820
.1	2.3	.008193	.016153	.035753
.1	2.4	.007886	.015619	.034757
.1	2.5	.007602	.015123	.033824
.2	.1	.201628	.229170	.266217
.2	.2	.174630	.218639	.284986
.2	.3	.146064	.196038	.276636
.2	.4	.123348	.173968	.260163
.2	.5	.106102	.155384	.242835
.2	.6	.092895	.140157	.226812
.2	.7	.082564	.127649	.212556
.2	.8	.074303	.117259	.200004
.2	.9	.067563	.108518	.188953
.2	1.0	.061965	.101071	.179183
.2	1.1	.057245	.094652	.170501
.2	1.2	.053212	.089063	.162738
.2	1.3	.049727	.084151	.155757
.2	1.4	.046684	.079799	.149446
.2	1.5	.044005	.075914	.143709
.2	1.6	.041527	.072424	.138471
.2	1.7	.039502	.069271	.133668
.2	1.8	.037592	.066406	.129244
.2	1.9	.035865	.063791	.125156
.2	2.0	.034296	.061394	.121364
.2	2.1	.032864	.059188	.117837
.2	2.2	.031551	.057151	.114546
.2	2.3	.030343	.055262	.111457
.2	2.4	.029228	.053507	.108580
.2	2.5	.028196	.051871	.105866

Copyright Naval Air Systems Command
Provided by IHS
No reproduction or networking permitted without license from IHS

Licensee=NASA Technical Standards 4/9972545004, User=Aziz, Syed
Not for Resale, 05/31/2015 16:29:48 MDT

TABLE B-V-1.

60th, 70th and 80th percentiles of the lognormal distribution for means and sigmas from .1 to 2.5 (continued).

MEAN	SIGMA	60 PERCENT	70 PERCENT	80 PERCENT
.3	.1	.308999	.337417	.374011
.3	.2	.291067	.343064	.415832
.3	.3	.261946	.326258	.427478
.3	.4	.232534	.305822	.421424
.3	.5	.206706	.282530	.407281
.3	.6	.185022	.260952	.390244
.3	.7	.167000	.241768	.372778
.3	.8	.151974	.224948	.355961
.3	.9	.139342	.210235	.340218
.3	1.0	.128616	.197333	.325667
.3	1.1	.119418	.185964	.312288
.3	1.2	.111455	.175889	.300006
.3	1.3	.104500	.166909	.288725
.3	1.4	.098377	.158860	.278346
.3	1.5	.092948	.151606	.268775
.3	1.6	.088101	.145036	.259927
.3	1.7	.083748	.139058	.251727
.3	1.8	.079818	.133595	.244107
.3	1.9	.076252	.128582	.237007
.3	2.0	.073001	.123965	.230376
.3	2.1	.070026	.119698	.224168
.3	2.2	.067292	.115743	.218344
.3	2.3	.064772	.112065	.212867
.3	2.4	.062441	.108635	.207707
.3	2.5	.060278	.105432	.202836
.4	.1	.413035	.441541	.477410
.4	.2	.403256	.458339	.532433
.4	.3	.379013	.454249	.561473
.4	.4	.349261	.437678	.569971
.4	.5	.319492	.415575	.565313
.4	.6	.292127	.392076	.553272
.4	.7	.267876	.369238	.537551
.4	.8	.246695	.347936	.520326
.4	.9	.228265	.328447	.502814
.4	1.0	.212204	.310768	.485669
.4	1.1	.198151	.294778	.469222
.4	1.2	.185789	.280314	.453624
.4	1.3	.174855	.267207	.438923
.4	1.4	.165128	.255297	.425113
.4	1.5	.156428	.244443	.412158
.4	1.6	.148606	.234519	.400008
.4	1.7	.141539	.225415	.388609
.4	1.8	.135125	.217036	.377905
.4	1.9	.129279	.209302	.367841
.4	2.0	.123930	.202142	.358367
.4	2.1	.119017	.195493	.349435
.4	2.2	.114490	.189305	.341001
.4	2.3	.110305	.183529	.333027
.4	2.4	.106424	.178126	.325475
.4	2.5	.102816	.173061	.318315

Copyright Naval Air Systems Command
Provided by IHS
No reproduction or networking permitted without license from IHS

Licensee=NASA Technical Standards 4/9972545004, User=Aziz, Syed
Not for Resale, 05/31/2015 16:29:48 MDT

60th, 70th and 80th percentiles of the lognormal distribution for means and sigmas from .1 to 2.5 (continued).

MEAN	SIGMA	60 PERCENT	70 PERCENT	80 PERCENT
.5	.1	.515518	.543947	.579215
.5	.2	.511835	.568172	.642030
.5	.3	.493415	.573439	.683724
.5	.4	.466591	.564587	.705714
.5	.5	.436576	.547097	.712464
.5	.6	.406623	.525254	.708736
.5	.7	.378393	.501846	.698370
.5	.8	.352557	.478493	.684094
.5	.9	.329253	.456050	.667720
.5	1.0	.308369	.434920	.650407
.5	1.1	.289687	.415246	.632878
.5	1.2	.272960	.397036	.615571
.5	1.3	.257951	.380223	.598744
.5	1.4	.244440	.364711	.582540
.5	1.5	.232236	.350393	.567030
.5	1.6	.221173	.337159	.552239
.5	1.7	.211108	.324909	.538165
.5	1.8	.201917	.313546	.524788
.5	1.9	.193497	.302985	.512081
.5	2.0	.185758	.293149	.500010
.5	2.1	.178622	.283968	.488540
.5	2.2	.172023	.275383	.477634
.5	2.3	.165904	.267337	.467257
.5	2.4	.160215	.259783	.457376
.5	2.5	.154913	.252677	.447959
.6	.1	.617183	.645504	.680304
.6	.2	.617998	.674833	.748023
.6	.3	.604883	.687509	.798650
.6	.4	.582133	.686129	.831664
.6	.5	.554038	.674565	.849315
.6	.6	.523891	.656516	.854957
.6	.7	.493830	.634874	.851889
.6	.8	.465067	.611644	.842848
.6	.9	.438191	.588114	.829908
.6	1.0	.413412	.565060	.814561
.6	1.1	.390732	.542917	.797851
.6	1.2	.370043	.521904	.780489
.6	1.3	.351190	.502107	.762952
.6	1.4	.334001	.483536	.745556
.6	1.5	.318306	.466152	.728504
.6	1.6	.303949	.449895	.711923
.6	1.7	.290784	.434694	.695887
.6	1.8	.278684	.420471	.680436
.6	1.9	.267533	.407153	.665585
.6	2.0	.257232	.394667	.651333
.6	2.1	.247692	.382946	.637669
.6	2.2	.238836	.371928	.624576
.6	2.3	.230595	.361556	.612032
.6	2.4	.222909	.351778	.600013
.6	2.5	.215727	.342547	.588494

Copyright Naval Air Systems Command
Provided by IHS
No reproduction or networking permitted without license from IHS
Licensee=NASA Technical Standards 4/9972545004, User=Aziz, Syed
Not for Resale, 05/31/2015 16:29:48 MDT

TABLE B-V-1.

60th, 70th and 80th percentiles of the lognormal distribution for means and sigmas from .1 to 2.5 (continued).

MEAN	SIGMA	60 PERCENT	70 PERCENT	80 PERCENT
.7	.1	.718373	.746589	.781022
.7	.2	.722570	.779571	.852016
.7	.3	.713944	.797099	.909022
.7	.4	.695388	.803159	.950680
.7	.5	.670232	.797639	.977825
.7	.6	.641427	.784357	.992571
.7	.7	.611206	.765936	.997449
.7	.8	.581076	.744451	.994874
.7	.9	.551961	.721416	.986892
.7	1.0	.524368	.697872	.975127
.7	1.1	.498529	.674502	.960815
.7	1.2	.474508	.651733	.944872
.7	1.3	.452267	.629817	.927964
.7	1.4	.431717	.608888	.910570
.7	1.5	.412740	.589003	.893030
.7	1.6	.395211	.570172	.875581
.7	1.7	.379003	.552370	.858387
.7	1.8	.363998	.535559	.841557
.7	1.9	.350084	.519689	.825164
.7	2.0	.337159	.504704	.809251
.7	2.1	.325131	.490550	.793842
.7	2.2	.313917	.477170	.778948
.7	2.3	.303443	.464512	.764568
.7	2.4	.293641	.452526	.750696
.7	2.5	.284453	.441165	.737321
.8	.1	.819263	.847385	.881526
.8	.2	.826070	.883082	.954821
.8	.3	.821164	.906002	1.016487
.8	.4	.806511	.916678	1.064867
.8	.5	.784635	.916780	1.099959
.8	.6	.758026	.908498	1.122945
.8	.7	.728788	.894042	1.135621
.8	.8	.698521	.875355	1.139942
.8	.9	.668344	.853997	1.137748
.8	1.0	.638985	.831150	1.130627
.8	1.1	.610877	.807670	1.119881
.8	1.2	.584254	.784153	1.106543
.8	1.3	.559210	.761001	1.091413
.8	1.4	.535753	.738477	1.075101
.8	1.5	.513838	.716737	1.058066
.8	1.6	.493391	.695872	1.040652
.8	1.7	.474321	.675921	1.023110
.8	1.8	.456531	.656893	1.005628
.8	1.9	.439924	.638774	.988339
.8	2.0	.424408	.621536	.971338
.8	2.1	.409895	.605144	.954692
.8	2.2	.396301	.589556	.938445
.8	2.3	.383552	.574732	.922625
.8	2.4	.371578	.560628	.907248
.8	2.5	.360317	.547202	.892322

Copyright Naval Air Systems Command
Provided by IHS
No reproduction or networking permitted without license from IHS

Licensee=NASA Technical Standards 4/9972545004, User=Aziz, Syed
Not for Resale, 05/31/2015 16:29:48 MDT

TABLE B-V-1.

60th, 70th and 80th percentiles of the lognormal distribution for means and sigmas from .1 to 2.5 (continued).

MEAN	SIGMA	60 PERCENT	70 PERCENT	80 PERCENT
.9	.1	.919954	.947994	.981897
.9	.2	.928822	.985773	1.056874
.9	.3	.926997	1.012250	1.122034
.9	.4	.915829	1.027526	1.175669
.9	.5	.897217	1.032642	1.217311
.9	.6	.873200	1.029193	1.247496
.9	.7	.845653	1.018963	1.267407
.9	.8	.816133	1.003661	1.278538
.9	.9	.785837	.984775	1.282435
.9	1.0	.755626	.963520	1.280545
.9	1.1	.726089	.940846	1.274135
.9	1.2	.697601	.917466	1.264272
.9	1.3	.670382	.893902	1.251627
.9	1.4	.644542	.870525	1.237500
.9	1.5	.620118	.847591	1.221842
.9	1.6	.597096	.825270	1.205285
.9	1.7	.575432	.803671	1.188163
.9	1.8	.555065	.782856	1.170733
.9	1.9	.535921	.762854	1.153192
.9	2.0	.517925	.743673	1.135688
.9	2.1	.501001	.725304	1.118333
.9	2.2	.485072	.707727	1.101210
.9	2.3	.470069	.690917	1.084380
.9	2.4	.455923	.674843	1.067884
.9	2.5	.442572	.659473	1.051753
1.0	.1	1.020504	1.048473	1.082180
1.0	.2	1.031035	1.087893	1.158430
1.0	.3	1.031779	1.117232	1.226270
1.0	.4	1.023670	1.136345	1.284060
1.0	.5	1.008139	1.145848	1.331084
1.0	.6	.986831	1.146879	1.367449
1.0	.7	.961365	1.140839	1.393870
1.0	.8	.933182	1.129174	1.411429
1.0	.9	.903469	1.113235	1.421364
1.0	1.0	.873152	1.094194	1.424928
1.0	1.1	.842916	1.073026	1.423285
1.0	1.2	.813247	1.050508	1.417471
1.0	1.3	.784468	1.027244	1.408375
1.0	1.4	.756787	1.003692	1.396740
1.0	1.5	.730318	.980191	1.383179
1.0	1.6	.705114	.956985	1.368189
1.0	1.7	.681184	.934249	1.352170
1.0	1.8	.658507	.912100	1.335441
1.0	1.9	.637043	.890615	1.318256
1.0	2.0	.616739	.869840	1.300815
1.0	2.1	.597536	.849797	1.283274
1.0	2.2	.579374	.830493	1.265756
1.0	2.3	.562189	.811922	1.248354
1.0	2.4	.545921	.794071	1.231142
1.0	2.5	.530510	.776920	1.214173

Copyright Naval Air Systems Command
Provided by IHS
No reproduction or networking permitted without license from IHS

Licensee=NASA Technical Standards 4/9972545004, User=Aziz, Syed
Not for Resale, 05/31/2015 16:29:48 MDT

TABLE B-V-I.

60th, 70th and 80th percentiles of the lognormal distribution for means and sigmas from .1 to 2.5 (continued).

MEAN	SIGMA	60 PERCENT	70 PERCENT	80 PERCENT
1.1	.1	1.120953	1.148859	1.182403
1.1	.2	1.132852	1.189603	1.259642
1.1	.3	1.135756	1.221279	1.329585
1.1	.4	1.130316	1.243608	1.390700
1.1	.5	1.117617	1.256921	1.442159
1.1	.6	1.098976	1.262014	1.483793
1.1	.7	1.075768	1.259966	1.515972
1.1	.8	1.049283	1.251972	1.539436
1.1	.9	1.020649	1.239213	1.555141
1.1	1.0	.990798	1.222777	1.564127
1.1	1.1	.960467	1.203613	1.567420
1.1	1.2	.930212	1.182518	1.565983
1.1	1.3	.900441	1.160141	1.560676
1.1	1.4	.871437	1.136998	1.552250
1.1	1.5	.843389	1.113493	1.541346
1.1	1.6	.816413	1.089934	1.528503
1.1	1.7	.790573	1.066554	1.514168
1.1	1.8	.765892	1.043522	1.498711
1.1	1.9	.742364	1.020961	1.482432
1.1	2.0	.719967	.998957	1.465578
1.1	2.1	.698665	.977566	1.448346
1.1	2.2	.678412	.956824	1.430896
1.1	2.3	.659162	.936747	1.413356
1.1	2.4	.640862	.917343	1.395828
1.1	2.5	.623461	.898606	1.378392
1.2	.1	1.221326	1.249178	1.282582
1.2	.2	1.234367	1.291009	1.360609
1.2	.3	1.239105	1.324622	1.432231
1.2	.4	1.235996	1.349667	1.496045
1.2	.5	1.225864	1.366284	1.551181
1.2	.6	1.209767	1.375017	1.597300
1.2	.7	1.188856	1.376685	1.634524
1.2	.8	1.164267	1.372257	1.663328
1.2	.9	1.137039	1.362746	1.684418
1.2	1.0	1.108076	1.349129	1.698630
1.2	1.1	1.078124	1.332297	1.706841
1.2	1.2	1.047782	1.313033	1.709913
1.2	1.3	1.017512	1.292000	1.708649
1.2	1.4	.987661	1.269748	1.703777
1.2	1.5	.958477	1.246725	1.695940
1.2	1.6	.930134	1.223288	1.685695
1.2	1.7	.902747	1.199717	1.673519
1.2	1.8	.876381	1.176229	1.659815
1.2	1.9	.851071	1.152989	1.644922
1.2	2.0	.826824	1.130121	1.629123
1.2	2.1	.803629	1.107715	1.612652
1.2	2.2	.781464	1.085834	1.595703
1.2	2.3	.760295	1.064523	1.578434
1.2	2.4	.740086	1.043308	1.560978
1.2	2.5	.720795	1.023703	1.543438

Copyright Naval Air Systems Command
Provided by IHS
No reproduction or networking permitted without license from IHS
Licensee=NASA Technical Standards 4/9972545004, User=Aziz, Syed
Not for Resale, 05/31/2015 16:29:48 MDT

TABLE B-V-1.

60th, 70th and 80th percentiles of the lognormal distribution for means and sigmas from .1 to 2.5 (continued).

MEAN	SIGMA	60 PERCENT	70 PERCENT	80 PERCENT
1.3	.1	1.321641	1.349445	1.382729
1.3	.2	1.335649	1.392184	1.461395
1.3	.3	1.341959	1.427423	1.534383
1.3	.4	1.340890	1.454780	1.600414
1.3	.5	1.333072	1.474268	1.658621
1.3	.6	1.319353	1.486246	1.708565
1.3	.7	1.300097	1.491326	1.750194
1.3	.8	1.278089	1.490285	1.783778
1.3	.9	1.252469	1.483975	1.809818
1.3	1.0	1.224686	1.473262	1.828966
1.3	1.1	1.195475	1.458955	1.841950
1.3	1.2	1.165447	1.441800	1.849520
1.3	1.3	1.135097	1.422400	1.852406
1.3	1.4	1.104216	1.401473	1.851290
1.3	1.5	1.074900	1.379334	1.846796
1.3	1.6	1.045571	1.356427	1.839480
1.3	1.7	1.016988	1.333069	1.829630
1.3	1.8	.989259	1.305516	1.818271
1.3	1.9	.962455	1.285968	1.805166
1.3	2.0	.936615	1.262586	1.790827
1.3	2.1	.911754	1.239469	1.775517
1.3	2.2	.887874	1.216772	1.759430
1.3	2.3	.864959	1.194502	1.742841
1.3	2.4	.842988	1.172726	1.725818
1.3	2.5	.821933	1.151484	1.708521
1.4	.1	1.421910	1.449672	1.482852
1.4	.2	1.436746	1.493179	1.562045
1.4	.3	1.444417	1.529800	1.636159
1.4	.4	1.445141	1.559142	1.704033
1.4	.5	1.439404	1.581134	1.764826
1.4	.6	1.427887	1.595997	1.818044
1.4	.7	1.411394	1.604187	1.863517
1.4	.8	1.390776	1.606317	1.901359
1.4	.9	1.366872	1.603099	1.931906
1.4	1.0	1.340465	1.595277	1.955650
1.4	1.1	1.312257	1.583585	1.973183
1.4	1.2	1.282855	1.568714	1.985141
1.4	1.3	1.252768	1.551290	1.992171
1.4	1.4	1.222412	1.531872	1.994899
1.4	1.5	1.192121	1.510939	1.993911
1.4	1.6	1.162153	1.488903	1.989748
1.4	1.7	1.132705	1.466106	1.982895
1.4	1.8	1.103923	1.442833	1.973784
1.4	1.9	1.075910	1.419316	1.962794
1.4	2.0	1.048736	1.395744	1.950254
1.4	2.1	1.022445	1.372267	1.936451
1.4	2.2	.997058	1.349004	1.921630
1.4	2.3	.972584	1.326046	1.906001
1.4	2.4	.949016	1.303466	1.889743
1.4	2.5	.926340	1.281315	1.873009

Copyright Naval Air Systems Command
Provided by IHS
No reproduction or networking permitted without license from IHS

Licensee=NASA Technical Standards 4/9972545004, User=Aziz, Syed
Not for Resale, 05/31/2015 16:29:48 MDT

TABLE B-V-1.

60th, 70th and 80th percentiles of the lognormal distribution for means and sigmas from .1 to 2.5 (continued).

MEAN	SIGMA	60 PERCENT	70 PERCENT	80 PERCENT
1.5	.1	1.522143	1.549867	1.582955
1.5	.2	1.537697	1.594032	1.662589
1.5	.3	1.546553	1.631840	1.737645
1.5	.4	1.546861	1.662899	1.807068
1.5	.5	1.544995	1.687084	1.870057
1.5	.6	1.535505	1.704517	1.926090
1.5	.7	1.521060	1.715528	1.974920
1.5	.8	1.502394	1.720600	2.016547
1.5	.9	1.480246	1.720318	2.051173
1.5	1.0	1.455333	1.715321	2.079160
1.5	1.1	1.428313	1.706259	2.100972
1.5	1.2	1.399773	1.693762	2.117143
1.5	1.3	1.370221	1.678420	2.128232
1.5	1.4	1.340088	1.660770	2.134800
1.5	1.5	1.309728	1.641291	2.137391
1.5	1.6	1.279428	1.620400	2.136516
1.5	1.7	1.249417	1.598455	2.132645
1.5	1.8	1.219870	1.575762	2.126207
1.5	1.9	1.190921	1.552576	2.117585
1.5	2.0	1.162668	1.529110	2.107119
1.5	2.1	1.135180	1.505538	2.095111
1.5	2.2	1.108502	1.482003	2.081821
1.5	2.3	1.082662	1.458619	2.067479
1.5	2.4	1.057671	1.435478	2.052283
1.5	2.5	1.033530	1.412651	2.036404
1.6	.1	1.622346	1.650036	1.683044
1.6	.2	1.638527	1.694771	1.763052
1.6	.3	1.648426	1.733607	1.838905
1.6	.4	1.652140	1.766163	1.909642
1.6	.5	1.649958	1.792279	1.974508
1.6	.6	1.642327	1.812004	2.032975
1.6	.7	1.629806	1.825571	2.084745
1.6	.8	1.613022	1.833356	2.129734
1.6	.9	1.592629	1.835838	2.168042
1.6	1.0	1.569271	1.833560	2.199918
1.6	1.1	1.543559	1.827089	2.225723
1.6	1.2	1.516052	1.816995	2.245890
1.6	1.3	1.487248	1.803824	2.260898
1.6	1.4	1.457577	1.788085	2.271241
1.6	1.5	1.427406	1.770242	2.277412
1.6	1.6	1.397043	1.750710	2.279884
1.6	1.7	1.366737	1.729856	2.279107
1.6	1.8	1.336689	1.707995	2.275496
1.6	1.9	1.307059	1.685399	2.269431
1.6	2.0	1.277969	1.662300	2.261254
1.6	2.1	1.249512	1.638893	2.251273
1.6	2.2	1.221755	1.615339	2.239762
1.6	2.3	1.194743	1.591773	2.226963
1.6	2.4	1.168508	1.568305	2.213087
1.6	2.5	1.143065	1.545025	2.198321

Copyright Naval Air Systems Command
Provided by IHS
No reproduction or networking permitted without license from IHS

Licensee=NASA Technical Standards 4/9972545004, User=Aziz, Syed
Not for Resale, 05/31/2015 16:29:48 MDT

TABLE B-V-1.

60th, 70th and 80th percentiles of the lognormal distribution for means and sigmas from .1 to 2.5 (continued).

MEAN	SIGMA	60 PERCENT	70 PERCENT	80 PERCENT
1.7	.1	1.722525	1.750185	1.783121
1.7	.2	1.739258	1.795417	1.863449
1.7	.3	1.750080	1.835152	1.939982
1.7	.4	1.755048	1.869022	2.011845
1.7	.5	1.754387	1.896846	2.078329
1.7	.6	1.748460	1.918621	2.138912
1.7	.7	1.737735	1.934503	2.193264
1.7	.8	1.722748	1.944785	2.241242
1.7	.9	1.704075	1.949850	2.282867
1.7	1.0	1.682292	1.950160	2.318298
1.7	1.1	1.657062	1.946208	2.347804
1.7	1.2	1.631609	1.938507	2.371732
1.7	1.3	1.603710	1.927538	2.390484
1.7	1.4	1.574692	1.913795	2.404439
1.7	1.5	1.544525	1.897716	2.414185
1.7	1.6	1.514724	1.879707	2.420008
1.7	1.7	1.484358	1.860130	2.422377
1.7	1.8	1.454046	1.839308	2.421668
1.7	1.9	1.423968	1.817523	2.418309
1.7	2.0	1.394267	1.795019	2.412580
1.7	2.1	1.365057	1.772006	2.404810
1.7	2.2	1.336425	1.748662	2.395278
1.7	2.3	1.308435	1.725139	2.384233
1.7	2.4	1.281134	1.701563	2.371898
1.7	2.5	1.254553	1.678039	2.358472
1.8	.1	1.822684	1.850317	1.883189
1.8	.2	1.839908	1.895987	1.963794
1.8	.3	1.851550	1.936513	2.040913
1.8	.4	1.857643	1.971545	2.113749
1.8	.5	1.858359	2.000888	2.181637
1.8	.6	1.853994	2.024500	2.244068
1.8	.7	1.844939	2.042482	2.300697
1.8	.8	1.831657	2.055053	2.351338
1.8	.9	1.814650	2.062526	2.395950
1.8	1.0	1.794434	2.065284	2.434622
1.8	1.1	1.771521	2.063755	2.467545
1.8	1.2	1.746400	2.058386	2.494991
1.8	1.3	1.719524	2.049630	2.517292
1.8	1.4	1.691306	2.037926	2.534814
1.8	1.5	1.662113	2.023694	2.547945
1.8	1.6	1.632267	2.007322	2.557075
1.8	1.7	1.602042	1.989166	2.562593
1.8	1.8	1.571673	1.969549	2.564870
1.8	1.9	1.541356	1.948757	2.564258
1.8	2.0	1.511252	1.927041	2.561089
1.8	2.1	1.481491	1.904622	2.555666
1.8	2.2	1.452178	1.881692	2.548269
1.8	2.3	1.423394	1.858416	2.539152
1.8	2.4	1.395202	1.834932	2.528543
1.8	2.5	1.367647	1.811362	2.516649

Copyright Naval Air Systems Command
Provided by IHS
No reproduction or networking permitted without license from IHS

Licensee=NASA Technical Standards 4/9972545004, User=Aziz, Syed
Not for Resale, 05/31/2015 16:29:48 MDT

TABLE B-V-1.

60th, 70th and 80th percentiles of the lognormal distribution for means and sigmas from .1 to 2.5 (continued).

MEAN	SIGMA	60 PERCENT	70 PERCENT	80 PERCENT
1.9	.1	1.922826	1.950434	1.983248
1.9	.2	1.940487	1.996493	2.064095
1.9	.3	1.952856	2.037721	2.141725
1.9	.4	1.959971	2.073785	2.215407
1.9	.5	1.961937	2.104485	2.284520
1.9	.6	1.959004	2.129751	2.348576
1.9	.7	1.951503	2.149640	2.407220
1.9	.8	1.939830	2.164313	2.460237
1.9	.9	1.924423	2.174021	2.507543
1.9	1.0	1.905745	2.179083	2.549166
1.9	1.1	1.884258	2.179867	2.585236
1.9	1.2	1.860415	2.176766	2.615959
1.9	1.3	1.834642	2.170186	2.641605
1.9	1.4	1.807336	2.160530	2.662481
1.9	1.5	1.778854	2.148189	2.678926
1.9	1.6	1.749516	2.133532	2.691289
1.9	1.7	1.719604	2.116905	2.699921
1.9	1.8	1.689359	2.098621	2.705168
1.9	1.9	1.658988	2.078969	2.707362
1.9	2.0	1.628667	2.058202	2.706821
1.9	2.1	1.598540	2.036550	2.703841
1.9	2.2	1.568727	2.014212	2.698697
1.9	2.3	1.539325	1.991362	2.691643
1.9	2.4	1.510409	1.968153	2.682910
1.9	2.5	1.482040	1.944716	2.672710
2.0	.1	2.022953	2.050538	2.083301
2.0	.2	2.041008	2.096945	2.164360
2.0	.3	2.054049	2.138800	2.242437
2.0	.4	2.062071	2.175786	2.316861
2.0	.5	2.065175	2.207704	2.387052
2.0	.6	2.063558	2.234464	2.452541
2.0	.7	2.057500	2.256087	2.512975
2.0	.8	2.047339	2.272690	2.568120
2.0	.9	2.033462	2.284471	2.617855
2.0	1.0	2.016278	2.291695	2.662167
2.0	1.1	1.996206	2.294676	2.701130
2.0	1.2	1.973662	2.293758	2.734898
2.0	1.3	1.949045	2.289303	2.763682
2.0	1.4	1.922731	2.281678	2.787740
2.0	1.5	1.895065	2.271244	2.807363
2.0	1.6	1.866363	2.258349	2.822857
2.0	1.7	1.836905	2.243322	2.834540
2.0	1.8	1.806938	2.226469	2.842729
2.0	1.9	1.776675	2.208073	2.847734
2.0	2.0	1.746304	2.188388	2.849855
2.0	2.1	1.715979	2.167646	2.849378
2.0	2.2	1.685832	2.146052	2.846570
2.0	2.3	1.655974	2.123788	2.841681
2.0	2.4	1.626493	2.101016	2.834942
2.0	2.5	1.597462	2.077876	2.826567

Copyright Naval Air Systems Command
Provided by IHS
No reproduction or networking permitted without license from IHS

Licensee=NASA Technical Standards 4/9972545004, User=Aziz, Syed
Not for Resale, 05/31/2015 16:29:48 MDT

TABLE B-V-I.

60th, 70th and 80th percentiles of the lognormal distribution for means and sigmas from .1 to 2.5 (continued).

MEAN	SIGMA	60 PERCENT	70 PERCENT	80 PERCENT
2.1	.1	2.123068	2.150633	2.183348
2.1	.2	2.141479	2.197352	2.264595
2.1	.3	2.155120	2.239762	2.343067
2.1	.4	2.163973	2.277584	2.418144
2.1	.5	2.168116	2.310599	2.489288
2.1	.6	2.167711	2.338713	2.556049
2.1	.7	2.162993	2.361917	2.618079
2.1	.8	2.154253	2.380293	2.675133
2.1	.9	2.141931	2.393996	2.727066
2.1	1.0	2.126089	2.403245	2.773827
2.1	1.1	2.107407	2.408305	2.815449
2.1	1.2	2.086164	2.409476	2.852039
2.1	1.3	2.062733	2.407081	2.883759
2.1	1.4	2.037467	2.401450	2.910823
2.1	1.5	2.010697	2.392916	2.933476
2.1	1.6	1.982730	2.381603	2.951985
2.1	1.7	1.953843	2.368423	2.966635
2.1	1.8	1.924282	2.353070	2.977712
2.1	1.9	1.894268	2.336019	2.985505
2.1	2.0	1.863952	2.317521	2.990293
2.1	2.1	1.833619	2.297807	2.992348
2.1	2.2	1.803291	2.277067	2.991028
2.1	2.3	1.773127	2.255547	2.989277
2.1	2.4	1.743229	2.233354	2.984622
2.1	2.5	1.713680	2.210656	2.978176
2.2	.1	2.223173	2.250716	2.283390
2.2	.2	2.241906	2.297719	2.364805
2.2	.3	2.256092	2.340642	2.443627
2.2	.4	2.265704	2.379207	2.519285
2.2	.5	2.270799	2.413216	2.591275
2.2	.6	2.271511	2.442559	2.659169
2.2	.7	2.268038	2.467209	2.722628
2.2	.8	2.260632	2.487216	2.781400
2.2	.9	2.249589	2.502702	2.835323
2.2	1.0	2.235233	2.513843	2.884318
2.2	1.1	2.217905	2.520865	2.928384
2.2	1.2	2.197953	2.524029	2.967586
2.2	1.3	2.175719	2.523618	3.002049
2.2	1.4	2.151537	2.519932	3.031943
2.2	1.5	2.125721	2.513274	3.057473
2.2	1.6	2.098566	2.503943	3.078872
2.2	1.7	2.070343	2.492234	3.096388
2.2	1.8	2.041298	2.478426	3.110283
2.2	1.9	2.011650	2.462784	3.120817
2.2	2.0	1.981597	2.445555	3.128253
2.2	2.1	1.951308	2.426966	3.132846
2.2	2.2	1.920934	2.407227	3.134841
2.2	2.3	1.890603	2.386527	3.134473
2.2	2.4	1.860424	2.365035	3.131966
2.2	2.5	1.830492	2.342909	3.127527

Copyright Naval Air Systems Command
Provided by IHS
No reproduction or networking permitted without license from IHS

Licensee=NASA Technical Standards 4/9972545004, User=Aziz, Syed
Not for Resale, 05/31/2015 16:29:48 MDT

TABLE B-V-1.

60th, 70th and 80th percentiles of the lognormal distribution for means and sigmas from .1 to 2.5 (continued).

MEAN	SIGMA	60 PERCENT	70 PERCENT	80 PERCENT
2.3	.1	2.323268	2.350796	2.383428
2.3	.2	2.342296	2.398052	2.464994
2.3	.3	2.356378	2.441434	2.544128
2.3	.4	2.367284	2.480678	2.620303
2.3	.5	2.373255	2.515590	2.693049
2.3	.6	2.374999	2.546055	2.761958
2.3	.7	2.372684	2.572029	2.826701
2.3	.8	2.366529	2.593540	2.887024
2.3	.9	2.356792	2.610678	2.942753
2.3	1.0	2.343763	2.623588	2.993788
2.3	1.1	2.327748	2.632459	3.040099
2.3	1.2	2.309063	2.637517	3.081721
2.3	1.3	2.288026	2.639012	3.118741
2.3	1.4	2.264947	2.637211	3.151293
2.3	1.5	2.240124	2.632390	3.179548
2.3	1.6	2.213839	2.624826	3.203703
2.3	1.7	2.186355	2.614793	3.223978
2.3	1.8	2.157913	2.602556	3.240604
2.3	1.9	2.128733	2.588368	3.253819
2.3	2.0	2.099011	2.572468	3.263864
2.3	2.1	2.068923	2.555079	3.270978
2.3	2.2	2.038624	2.536409	3.275393
2.3	2.3	2.008249	2.516646	3.277334
2.3	2.4	1.977915	2.495964	3.277014
2.3	2.5	1.947724	2.474520	3.274639
2.4	.1	2.423355	2.450867	2.483462
2.4	.2	2.442652	2.498356	2.565163
2.4	.3	2.457790	2.542156	2.644578
2.4	.4	2.468734	2.582018	2.721218
2.4	.5	2.475511	2.617754	2.794641
2.4	.6	2.478210	2.649245	2.864462
2.4	.7	2.476974	2.676435	2.930363
2.4	.8	2.471991	2.699334	2.992090
2.4	.9	2.463491	2.718006	3.049462
2.4	1.0	2.451728	2.732568	3.102362
2.4	1.1	2.436979	2.743180	3.150740
2.4	1.2	2.419533	2.750034	3.194600
2.4	1.3	2.399681	2.753352	3.234003
2.4	1.4	2.377712	2.753370	3.269049
2.4	1.5	2.353906	2.750339	3.299877
2.4	1.6	2.328533	2.744514	3.326655
2.4	1.7	2.301846	2.736149	3.349573
2.4	1.8	2.274079	2.725492	3.368835
2.4	1.9	2.245448	2.712786	3.384657
2.4	2.0	2.216151	2.698258	3.397259
2.4	2.1	2.186365	2.682127	3.406862
2.4	2.2	2.156248	2.664595	3.413683
2.4	2.3	2.125940	2.645650	3.417936
2.4	2.4	2.095564	2.626066	3.419826
2.4	2.5	2.065228	2.605401	3.419551

Copyright Naval Air Systems Command
Provided by IHS
No reproduction or networking permitted without license from IHS

Licensee=NASA Technical Standards 4/9972545004, User=Aziz, Syed
Not for Resale, 05/31/2015 16:29:48 MDT

TABLE B-V-I.

60th, 70th and 80th percentiles of the lognormal distribution for means and sigmas from .1 to 2.5 (continued).

MEAN	SIGMA	60 PERCENT	70 PERCENT	80 PERCENT
2.5	.1	2.523436	2.550933	2.583494
2.5	.2	2.542980	2.598634	2.665317
2.5	.3	2.558537	2.642817	2.744985
2.5	.4	2.570067	2.683243	2.822043
2.5	.5	2.577589	2.719733	2.896076
2.5	.6	2.581174	2.752165	2.966721
2.5	.7	2.580944	2.780475	3.033669
2.5	.8	2.577063	2.804656	3.096671
2.5	.9	2.569730	2.824755	3.155540
2.5	1.0	2.559174	2.840862	3.210149
2.5	1.1	2.545644	2.853110	3.260429
2.5	1.2	2.529402	2.861666	3.306363
2.5	1.3	2.510715	2.866723	3.347984
2.5	1.4	2.489852	2.868491	3.385367
2.5	1.5	2.467077	2.867197	3.418622
2.5	1.6	2.442645	2.863074	3.447890
2.5	1.7	2.416797	2.856356	3.473333
2.5	1.8	2.389760	2.847277	3.495131
2.5	1.9	2.361748	2.836064	3.513477
2.5	2.0	2.332954	2.822936	3.528571
2.5	2.1	2.303556	2.808103	3.540615
2.5	2.2	2.273714	2.791764	3.549815
2.5	2.3	2.243571	2.774101	3.556370
2.5	2.4	2.213256	2.755289	3.560474
2.5	2.5	2.182879	2.735485	3.562319
2.6	.1	2.623510	2.650993	2.683523
2.6	.2	2.643282	2.698890	2.765458
2.6	.3	2.659225	2.743423	2.845354
2.6	.4	2.671297	2.784367	2.922790
2.6	.5	2.679509	2.821549	2.997375
2.6	.6	2.683918	2.854847	3.068765
2.6	.7	2.684628	2.884190	3.136664
2.6	.8	2.681780	2.909560	3.200827
2.6	.9	2.675551	2.930985	3.261065
2.6	1.0	2.666144	2.948537	3.317242
2.6	1.1	2.653783	2.962325	3.369275
2.6	1.2	2.638707	2.972491	3.417130
2.6	1.3	2.621161	2.979204	3.460817
2.6	1.4	2.601394	2.982651	3.500389
2.6	1.5	2.579653	2.983036	3.535930
2.6	1.6	2.556177	2.980571	3.567556
2.6	1.7	2.531199	2.975471	3.595406
2.6	1.8	2.504938	2.967955	3.619636
2.6	1.9	2.477599	2.958237	3.640418
2.6	2.0	2.449373	2.946524	3.657931
2.6	2.1	2.420436	2.933018	3.672363
2.6	2.2	2.390950	2.917910	3.683900
2.6	2.3	2.361059	2.901381	3.692731
2.6	2.4	2.330894	2.883601	3.699041
2.6	2.5	2.300571	2.864726	3.703009

Copyright Naval Air Systems Command
Provided by IHS
No reproduction or networking permitted without license from IHS
Licensee=NASA Technical Standards 4/9972545004, User=Aziz, Syed
Not for Resale, 05/31/2015 16:29:48 MDT

TABLE B-V-II.

90th, 95th and 99th percentiles of the lognormal distribution for means and sigmas from .1 to 2.5.

MEAN	SIGMA	90 PERCENT	95 PERCENT	99 PERCENT
.1	.1	.205523	.278112	.490493
.1	.2	.227300	.360383	.855549
.1	.3	.221083	.383683	1.079166
.1	.4	.209702	.386526	1.217205
.1	.5	.198214	.381881	1.300660
.1	.6	.187723	.374400	1.366951
.1	.7	.178380	.365944	1.408679
.1	.8	.170094	.357316	1.438011
.1	.9	.162725	.348874	1.458740
.1	1.0	.156138	.340772	1.473312
.1	1.1	.150215	.333071	1.483370
.1	1.2	.144859	.325783	1.490047
.1	1.3	.139988	.318901	1.494154
.1	1.4	.135536	.312402	1.496277
.1	1.5	.131448	.306265	1.496854
.1	1.6	.127678	.300461	1.496214
.1	1.7	.124188	.294968	1.494610
.1	1.8	.120945	.289760	1.492239
.1	1.9	.117921	.284816	1.489253
.1	2.0	.115094	.280116	1.485775
.1	2.1	.112444	.275641	1.481902
.1	2.2	.109952	.271375	1.477713
.1	2.3	.107605	.267301	1.473272
.1	2.4	.105388	.263407	1.468630
.1	2.5	.103290	.259679	1.463830
.2	.1	.327709	.389063	.536823
.2	.2	.411046	.556224	.980985
.2	.3	.445999	.661649	1.386603
.2	.4	.454601	.720766	1.711098
.2	.5	.451048	.752131	1.962764
.2	.6	.442165	.767367	2.158333
.2	.7	.431120	.773082	2.312036
.2	.8	.419404	.773053	2.434407
.2	.9	.407728	.769498	2.533017
.2	1.0	.396427	.763762	2.613321
.2	1.1	.385649	.756684	2.679299
.2	1.2	.375445	.748799	2.733902
.2	1.3	.365822	.740457	2.779355
.2	1.4	.356760	.731888	2.817359
.2	1.5	.348227	.723246	2.845234
.2	1.6	.340188	.714633	2.876022
.2	1.7	.332608	.706118	2.898548
.2	1.8	.325451	.697748	2.917479
.2	1.9	.318684	.689550	2.933357
.2	2.0	.312277	.681544	2.946625
.2	2.1	.306201	.673739	2.957650
.2	2.2	.300431	.666141	2.966739
.2	2.3	.294944	.658751	2.974148
.2	2.4	.289718	.651567	2.980094
.2	2.5	.284735	.644585	2.984762

Copyright Naval Air Systems Command
Provided by IHS
No reproduction or networking permitted without license from IHS

Licensee=NASA Technical Standards 4/9972545004, User=Aziz, Syed
Not for Resale, 05/31/2015 16:29:48 MDT

TABLE B-V-11.

90th, 95th and 99th percentiles of the lognormal distribution for means and sigmas from .1 to 2.5 (continued).

MEAN	SIGMA	90 PERCENT	95 PERCENT	99 PERCENT
.3	.1	.431421	.485417	.605599
.3	.2	.542971	.676791	1.023134
.3	.3	.616568	.834336	1.471478
.3	.4	.657409	.949104	1.890045
.3	.5	.676336	1.028166	2.255711
.3	.6	.681901	1.081149	2.566646
.3	.7	.679587	1.115870	2.828878
.3	.8	.672710	1.137896	3.050107
.3	.9	.663248	1.151050	3.237499
.3	1.0	.652392	1.157941	3.397100
.3	1.1	.640865	1.160366	3.533822
.3	1.2	.629106	1.159579	3.651610
.3	1.3	.617385	1.156468	3.753622
.3	1.4	.605864	1.151668	3.842395
.3	1.5	.594641	1.145643	3.919981
.3	1.6	.583768	1.138732	3.988047
.3	1.7	.573274	1.131187	4.047962
.3	1.8	.563168	1.123199	4.100853
.3	1.9	.553450	1.114909	4.147660
.3	2.0	.544111	1.106426	4.189168
.3	2.1	.535140	1.097832	4.226038
.3	2.2	.526522	1.089191	4.258831
.3	2.3	.518241	1.080551	4.288026
.3	2.4	.510282	1.071949	4.314032
.3	2.5	.502629	1.063414	4.337203
.4	.1	.532028	.581813	.688109
.4	.2	.655417	.778126	1.075646
.4	.3	.753295	.960216	1.513882
.4	.4	.822091	1.112448	1.961970
.4	.5	.866214	1.232190	2.386617
.4	.6	.891997	1.323299	2.773206
.4	.7	.904959	1.391347	3.117876
.4	.8	.909201	1.441532	3.422195
.4	.9	.907593	1.478084	3.689952
.4	1.0	.902096	1.504263	3.925528
.4	1.1	.894039	1.522530	4.133161
.4	1.2	.884330	1.534733	4.316666
.4	1.3	.873589	1.542261	4.479358
.4	1.4	.862240	1.546164	4.624072
.4	1.5	.850579	1.547240	4.753212
.4	1.6	.838808	1.546105	4.868813
.4	1.7	.827069	1.543234	4.972600
.4	1.8	.815457	1.538995	5.066033
.4	1.9	.804037	1.533682	5.150359
.4	2.0	.792854	1.527524	5.226641
.4	2.1	.781935	1.520703	5.295752
.4	2.2	.771297	1.513367	5.358598
.4	2.3	.760948	1.505634	5.415738
.4	2.4	.750891	1.497598	5.467805
.4	2.5	.741124	1.489337	5.515312

Copyright Naval Air Systems Command
Provided by IHS
No reproduction or networking permitted without license from IHS

Licensee=NASA Technical Standards 4/9972545004, User=Aziz, Syed
Not for Resale, 05/31/2015 16:29:48 MDT

TABLE B-V-II.

90th, 95th and 99th percentiles of the lognormal distribution for means and sigmas from .1 to 2.5 (continued).

MEAN	SIGMA	90 PERCENT	95 PERCENT	99 PERCENT
.5	.1	.631943	.679086	.777212
.5	.2	.760609	.874876	1.137550
.5	.3	.872622	1.067374	1.557531
.5	.4	.961634	1.241604	2.005182
.5	.5	1.027614	1.390560	2.452463
.5	.6	1.073820	1.513376	2.880576
.5	.7	1.104375	1.612423	3.279442
.5	.8	1.123074	1.691219	3.645118
.5	.9	1.132997	1.753329	3.977331
.5	1.0	1.136501	1.801915	4.277744
.5	1.1	1.135348	1.839619	4.548896
.5	1.2	1.130831	1.868578	4.793601
.5	1.3	1.123902	1.890595	5.014637
.5	1.4	1.115258	1.906757	5.214599
.5	1.5	1.105413	1.918417	5.395832
.5	1.6	1.094746	1.926344	5.560427
.5	1.7	1.083539	1.931227	5.710226
.5	1.8	1.072000	1.933619	5.846844
.5	1.9	1.060286	1.933967	5.971695
.5	2.0	1.048510	1.932632	6.086017
.5	2.1	1.036761	1.929910	6.190892
.5	2.2	1.025102	1.926043	6.287273
.5	2.3	1.013579	1.921231	6.375992
.5	2.4	1.002226	1.915639	6.457785
.5	2.5	.991068	1.909404	6.533301
.6	.1	.731693	.777043	.869834
.6	.2	.862842	.970834	1.211195
.6	.3	.983126	1.167189	1.610469
.6	.4	1.085942	1.353582	2.046269
.6	.5	1.169000	1.521922	2.496460
.6	.6	1.233137	1.668672	2.942955
.6	.7	1.280780	1.793573	3.373288
.6	.8	1.314818	1.898207	3.780091
.6	.9	1.337996	1.984948	4.159809
.6	1.0	1.352672	2.056332	4.511422
.6	1.1	1.360767	2.114745	4.835455
.6	1.2	1.363802	2.162258	5.133293
.6	1.3	1.362965	2.200793	5.406740
.6	1.4	1.359175	2.231740	5.657756
.6	1.5	1.353143	2.256394	5.888292
.6	1.6	1.345419	2.275793	6.100214
.6	1.7	1.336427	2.290793	6.295254
.6	1.8	1.326496	2.302100	6.474999
.6	1.9	1.315882	2.310301	6.640883
.6	2.0	1.304785	2.315881	6.794200
.6	2.1	1.293360	2.319246	6.936107
.6	2.2	1.281730	2.320731	7.067644
.6	2.3	1.269989	2.320023	7.189738
.6	2.4	1.258213	2.319158	7.303220
.6	2.5	1.246458	2.316539	7.408833

Copyright Naval Air Systems Command
Provided by IHS
No reproduction or networking permitted without license from IHS

Licensee=NASA Technical Standards 4/9972545004, User=Aziz, Syed
Not for Resale, 05/31/2015 16:29:48 MDT

TABLE B-V-II.

90th, 95th and 99th percentiles of the lognormal distribution for means and sigmas from .1 to 2.5 (continued).

MEAN	SIGMA	90 PERCENT	95 PERCENT	99 PERCENT
.7	.1	.831419	.875479	.964527
.7	.2	.963760	1.067007	1.291449
.7	.3	1.089006	1.264213	1.672466
.7	.4	1.201145	1.457022	2.093129
.7	.5	1.296980	1.637712	2.536704
.7	.6	1.375820	1.801616	2.987628
.7	.7	1.438660	1.946784	3.433448
.7	.8	1.487353	2.073190	3.865316
.7	.9	1.524034	2.181956	4.277615
.7	1.0	1.550769	2.274767	4.667249
.7	1.1	1.569406	2.353490	5.032927
.7	1.2	1.581513	2.419955	5.374563
.7	1.3	1.588392	2.475851	5.692829
.7	1.4	1.591102	2.522681	5.988842
.7	1.5	1.590498	2.561753	6.263945
.7	1.6	1.587266	2.594189	6.519580
.7	1.7	1.581958	2.620949	6.757189
.7	1.8	1.575015	2.642847	6.978172
.7	1.9	1.566790	2.660576	7.183855
.7	2.0	1.557569	2.674722	7.375472
.7	2.1	1.547578	2.685784	7.554165
.7	2.2	1.537004	2.694184	7.720981
.7	2.3	1.525994	2.700284	7.876875
.7	2.4	1.514670	2.704394	8.022721
.7	2.5	1.503128	2.706777	8.159309
.8	.1	.931162	.974251	1.060533
.8	.2	1.064056	1.163625	1.376219
.8	.3	1.192355	1.360309	1.741794
.8	.4	1.310835	1.556252	2.147292
.8	.5	1.416089	1.744592	2.580199
.8	.6	1.506550	1.920432	3.027765
.8	.7	1.582306	2.080917	3.478686
.8	.8	1.644182	2.224896	3.923940
.8	.9	1.693677	2.352439	4.356931
.8	1.0	1.732427	2.464379	4.773235
.8	1.1	1.762041	2.561961	5.170179
.8	1.2	1.783995	2.646597	5.546412
.8	1.3	1.799583	2.719721	5.901525
.8	1.4	1.809918	2.782694	6.235752
.8	1.5	1.815931	2.836768	6.549739
.8	1.6	1.818402	2.883065	6.844390
.8	1.7	1.817977	2.922575	7.120745
.8	1.8	1.815187	2.956168	7.379905
.8	1.9	1.810471	2.984599	7.622980
.8	2.0	1.804191	3.008525	7.851056
.8	2.1	1.796645	3.028515	8.065175
.8	2.2	1.788078	3.045060	8.266322
.8	2.3	1.778694	3.058588	8.455421
.8	2.4	1.768661	3.069467	8.633332
.8	2.5	1.758117	3.078019	8.800851

Copyright Naval Air Systems Command
Provided by IHS
No reproduction or networking permitted without license from IHS

Licensee=NASA Technical Standards 4/9972545004, User=Aziz, Syed
Not for Resale, 05/31/2015 16:29:48 MDT

TABLE B-V-II.

90th, 95th and 99th percentiles of the lognormal distribution for means and sigmas from .1 to 2.5 (continued).

MEAN	SIGMA	90 PERCENT	95 PERCENT	99 PERCENT
.9	.1	1.030931	1.073265	1.157422
.9	.2	1.164047	1.260697	1.464169
.9	.3	1.294263	1.456252	1.816798
.9	.4	1.417110	1.653454	2.208278
.9	.5	1.529301	1.846392	2.629223
.9	.6	1.628913	2.030373	3.069403
.9	.7	1.715256	2.202172	3.519040
.9	.8	1.788571	2.359954	3.969652
.9	.9	1.849705	2.503008	4.414433
.9	1.0	1.899831	2.631441	4.848279
.9	1.1	1.940243	2.745891	5.267616
.9	1.2	1.972227	2.847311	5.670136
.9	1.3	1.996983	2.936797	6.054523
.9	1.4	2.015593	3.015489	6.420201
.9	1.5	2.029008	3.084498	6.767133
.9	1.6	2.038047	3.144868	7.095653
.9	1.7	2.043413	3.197562	7.406342
.9	1.8	2.045703	3.243448	7.699939
.9	1.9	2.045418	3.283303	7.977272
.9	2.0	2.042986	3.317820	8.239211
.9	2.1	2.038762	3.347610	8.486634
.9	2.2	2.033049	3.373211	8.720407
.9	2.3	2.026100	3.395098	8.941369
.9	2.4	2.018129	3.413689	9.150321
.9	2.5	2.009314	3.429353	9.348023
1.0	.1	1.130727	1.172456	1.254932
1.0	.2	1.263885	1.358172	1.554424
1.0	.3	1.395320	1.552356	1.896169
1.0	.4	1.521218	1.749751	2.275099
1.0	.5	1.638543	1.945314	2.684115
1.0	.6	1.745243	2.134748	3.115062
1.0	.7	1.840237	2.314778	3.559686
1.0	.8	1.923267	2.483208	4.010364
1.0	.9	1.994683	2.638807	4.460544
1.0	1.0	2.055228	2.781120	4.904925
1.0	1.1	2.105864	2.910267	5.339443
1.0	1.2	2.147639	3.026752	5.761151
1.0	1.3	2.181603	3.131322	6.168045
1.0	1.4	2.208751	3.224847	6.558884
1.0	1.5	2.229993	3.308247	6.933015
1.0	1.6	2.246149	3.382438	7.290236
1.0	1.7	2.257939	3.448300	7.630667
1.0	1.8	2.265993	3.506658	7.954661
1.0	1.9	2.270858	3.558270	8.262731
1.0	2.0	2.273003	3.603831	8.555488
1.0	2.1	2.272833	3.643965	8.833607
1.0	2.2	2.270696	3.679237	9.097791
1.0	2.3	2.266887	3.710151	9.348754
1.0	2.4	2.261662	3.737157	9.587201
1.0	2.5	2.255239	3.760657	9.813820

Copyright Naval Air Systems Command
Provided by IHS
No reproduction or networking permitted without license from IHS

Licensee=NASA Technical Standards 4/9972545004, User=Aziz, Syed
Not for Resale, 05/31/2015 16:29:48 MDT

TABLE B-V-11.

90th, 95th and 99th percentiles of the lognormal distribution for means and sigmas from .1 to 2.5 (continued).

MEAN	SIGMA	90 PERCENT	95 PERCENT	99 PERCENT
1.1	.1	1.230548	1.271782	1.352894
1.1	.2	1.363651	1.455987	1.646393
1.1	.3	1.495861	1.648741	1.978922
1.1	.4	1.623918	1.845723	2.346761
1.1	.5	1.745074	2.042640	2.744475
1.1	.6	1.857291	2.235643	3.165563
1.1	.7	1.959287	2.421583	3.603139
1.1	.8	2.050469	2.598125	4.050524
1.1	.9	2.130808	2.763723	4.501666
1.1	1.0	2.200685	2.917525	4.951377
1.1	1.1	2.260751	3.059232	5.395418
1.1	1.2	2.311807	3.188965	5.830477
1.1	1.3	2.354720	3.307132	6.254084
1.1	1.4	2.390363	3.414330	6.664489
1.1	1.5	2.419569	3.511263	7.060537
1.1	1.6	2.443116	3.598687	7.441553
1.1	1.7	2.461714	3.677363	7.807232
1.1	1.8	2.475997	3.748038	8.157552
1.1	1.9	2.486530	3.811420	8.492704
1.1	2.0	2.493810	3.868174	8.813026
1.1	2.1	2.498274	3.918917	9.118965
1.1	2.2	2.500303	3.964214	9.411037
1.1	2.3	2.500228	4.004578	9.689801
1.1	2.4	2.498338	4.040479	9.955838
1.1	2.5	2.494884	4.072338	10.209739
1.2	.1	1.330390	1.371212	1.451197
1.2	.2	1.463385	1.554087	1.739668
1.2	.3	1.596084	1.745438	2.064328
1.2	.4	1.725684	1.941669	2.422398
1.2	.5	1.849723	2.139120	2.809670
1.2	.6	1.966252	2.334377	3.220938
1.2	.7	2.073906	2.524504	3.650483
1.2	.8	2.171884	2.707163	4.092537
1.2	.9	2.259885	2.880649	4.541647
1.2	1.0	2.337999	3.043844	4.992921
1.2	1.1	2.406606	3.196142	5.442162
1.2	1.2	2.466274	3.337344	5.885910
1.2	1.3	2.517682	3.467567	6.321415
1.2	1.4	2.561560	3.587146	6.746575
1.2	1.5	2.598641	3.696569	7.159852
1.2	1.6	2.629635	3.796415	7.560182
1.2	1.7	2.655213	3.887310	7.946891
1.2	1.8	2.675992	3.969896	8.319618
1.2	1.9	2.692533	4.044809	8.678246
1.2	2.0	2.705344	4.112663	9.022845
1.2	2.1	2.714876	4.174042	9.353627
1.2	2.2	2.721533	4.229491	9.670910
1.2	2.3	2.725671	4.279519	9.975083
1.2	2.4	2.727603	4.324597	10.266586
1.2	2.5	2.727608	4.365154	10.545889

Copyright Naval Air Systems Command
Provided by IHS
No reproduction or networking permitted without license from IHS

Licensee=NASA Technical Standards 4/9972545004, User=Aziz, Syed
Not for Resale, 05/31/2015 16:29:48 MDT

TABLE B-V-II.

90th, 95th and 99th percentiles of the lognormal distribution for means and sigmas from .1 to 2.5 (continued).

MEAN	SIGMA	90 PERCENT	95 PERCENT	99 PERCENT
1.3	.1	1.430251	1.470724	1.549761
1.3	.2	1.563110	1.652424	1.833959
1.3	.3	1.696108	1.842438	2.151840
1.3	.4	1.826818	2.037742	2.501300
1.3	.5	1.953044	2.235187	2.875044
1.3	.6	2.072962	2.431792	3.280874
1.3	.7	2.185194	2.624832	3.702044
1.3	.8	2.288825	2.812061	4.137609
1.3	.9	2.383362	2.991715	4.582731
1.3	1.0	2.468677	3.162523	5.032906
1.3	1.1	2.544924	3.323659	5.484117
1.3	1.2	2.612463	3.474680	5.932908
1.3	1.3	2.671796	3.615456	6.376403
1.3	1.4	2.723505	3.746094	6.812281
1.3	1.5	2.768209	3.866876	7.238733
1.3	1.6	2.806536	3.978205	7.654398
1.3	1.7	2.839098	4.080565	8.058299
1.3	1.8	2.866474	4.174482	8.449781
1.3	1.9	2.888208	4.260502	8.828452
1.3	2.0	2.907798	4.339169	9.194131
1.3	2.1	2.922699	4.411019	9.546804
1.3	2.2	2.934323	4.476564	9.886589
1.3	2.3	2.943042	4.536290	10.213701
1.3	2.4	2.949186	4.590655	10.528428
1.3	2.5	2.953052	4.640087	10.831113
1.4	.1	1.530127	1.570301	1.648530
1.4	.2	1.662838	1.750959	1.929053
1.4	.3	1.796007	1.939720	2.241048
1.4	.4	1.927520	2.134014	2.582898
1.4	.5	2.055418	2.331134	2.951994
1.4	.6	2.178012	2.528426	3.344931
1.4	.7	2.293961	2.723440	3.757761
1.4	.8	2.402290	2.914045	4.186258
1.4	.9	2.502388	3.098490	4.626168
1.4	1.0	2.593960	3.275423	5.073409
1.4	1.1	2.676983	3.443878	5.524221
1.4	1.2	2.751641	3.603232	5.975256
1.4	1.3	2.818272	3.753158	6.423623
1.4	1.4	2.877319	3.893569	6.866895
1.4	1.5	2.929286	4.024562	7.303090
1.4	1.6	2.974707	4.146380	7.730632
1.4	1.7	3.014124	4.259361	8.148311
1.4	1.8	3.048067	4.363913	8.555230
1.4	1.9	3.077046	4.460482	8.950761
1.4	2.0	3.101539	4.549535	9.334499
1.4	2.1	3.121990	4.631545	9.706221
1.4	2.2	3.138811	4.706979	10.065855
1.4	2.3	3.152376	4.776289	10.413444
1.4	2.4	3.163026	4.839909	10.749126
1.4	2.5	3.171070	4.898251	11.073110

Copyright Naval Air Systems Command
Provided by IHS
No reproduction or networking permitted without license from IHS
Licensee=NASA Technical Standards 4/9972545004, User=Aziz, Syed
Not for Resale, 05/31/2015 16:29:48 MDT

TABLE B-V-II.

90th, 95th and 99th percentiles of the lognormal distribution for means and sigmas from .1 to 2.5 (continued).

MEAN	SIGMA	90 PERCENT	95 PERCENT	99 PERCENT
1.5	.1	1.630016	1.669932	1.747464
1.5	.2	1.762574	1.849661	2.024796
1.5	.3	1.895828	2.037257	2.331636
1.5	.4	2.027922	2.230515	2.666732
1.5	.5	2.157104	2.427086	3.027997
1.5	.6	2.281827	2.624627	3.412649
1.5	.7	2.400803	2.820923	3.817390
1.5	.8	2.513045	3.013986	4.238612
1.5	.9	2.617865	3.202121	4.672593
1.5	1.0	2.714855	3.383954	5.115672
1.5	1.1	2.803854	3.558434	5.564381
1.5	1.2	2.884901	3.724812	6.015545
1.5	1.3	2.958193	3.882612	6.466339
1.5	1.4	3.024042	4.031587	6.914311
1.5	1.5	3.082842	4.171681	7.357388
1.5	1.6	3.135033	4.302984	7.793854
1.5	1.7	3.181081	4.425703	8.222329
1.5	1.8	3.221459	4.540129	8.641727
1.5	1.9	3.256630	4.646606	9.051225
1.5	2.0	3.287044	4.745518	9.450227
1.5	2.1	3.313126	4.837270	9.838325
1.5	2.2	3.335274	4.922272	10.215272
1.5	2.3	3.353859	5.000934	10.580951
1.5	2.4	3.369223	5.073657	10.935353
1.5	2.5	3.381680	5.140829	11.278556
1.6	.1	1.729916	1.765607	1.846532
1.6	.2	1.862323	1.948503	2.121066
1.6	.3	1.995601	2.135021	2.423362
1.6	.4	2.128112	2.327250	2.752457
1.6	.5	2.258289	2.523141	3.106610
1.6	.6	2.384711	2.720619	3.485389
1.6	.7	2.506163	2.917685	3.880608
1.6	.8	2.621670	3.112503	4.294584
1.6	.9	2.730503	3.303456	4.722269
1.6	1.0	2.832178	3.489185	5.160398
1.6	1.1	2.926430	3.668597	5.605807
1.6	1.2	3.013180	3.840865	6.055528
1.6	1.3	3.092508	4.005401	6.506855
1.6	1.4	3.164612	4.161834	6.957372
1.6	1.5	3.229781	4.309977	7.404978
1.6	1.6	3.288365	4.449793	7.847880
1.6	1.7	3.340753	4.581367	8.284583
1.6	1.8	3.387355	4.704879	8.713863
1.6	1.9	3.428585	4.820576	9.134743
1.6	2.0	3.464854	4.928758	9.546469
1.6	2.1	3.496560	5.029756	9.948475
1.6	2.2	3.524082	5.123921	10.340358
1.6	2.3	3.547780	5.211613	10.721856
1.6	2.4	3.567989	5.293195	11.092824
1.6	2.5	3.585022	5.369022	11.453212

12 Jan 1984

Copyright Naval Air Systems Command
Provided by IHS
No reproduction or networking permitted without license from IHS
Licensee=NASA Technical Standards 4/9972545004, User=Aziz, Syed
Not for Resale, 05/31/2015 16:29:48 MDT

TABLE B-V-11.

90th, 95th and 99th percentiles of the lognormal distribution for means and sigmas from .1 to 2.5 (continued).

MEAN	SIGMA	90 PERCENT	95 PERCENT	99 PERCENT
1.7	.1	1.828827	1.869318	1.945710
1.7	.2	1.952086	2.047465	2.217773
1.7	.3	2.095347	2.232887	2.516034
1.7	.4	2.228155	2.424214	2.839719
1.7	.5	2.359102	2.619348	3.187459
1.7	.6	2.486889	2.816547	3.557354
1.7	.7	2.610375	3.014007	3.947076
1.7	.8	2.728613	3.210038	4.353981
1.7	.9	2.840861	3.403117	4.775237
1.7	1.0	2.946585	3.591923	5.207944
1.7	1.1	3.045443	3.775356	5.649235
1.7	1.2	3.137267	3.952539	6.096367
1.7	1.3	3.222039	4.122810	6.546778
1.7	1.4	3.298859	4.285703	6.998136
1.7	1.5	3.370922	4.440926	7.448358
1.7	1.6	3.435493	4.588333	7.895625
1.7	1.7	3.493888	4.727905	8.338373
1.7	1.8	3.546450	4.859718	8.775282
1.7	1.9	3.593544	4.983931	9.205264
1.7	2.0	3.635536	5.100759	9.627437
1.7	2.1	3.672792	5.210460	10.041102
1.7	2.2	3.705666	5.313325	10.445728
1.7	2.3	3.734500	5.409660	10.840922
1.7	2.4	3.759617	5.499782	11.226415
1.7	2.5	3.781324	5.584013	11.602041
1.8	.1	1.929746	1.969059	2.044980
1.8	.2	2.061862	2.146530	2.314844
1.8	.3	2.195078	2.331130	2.609502
1.8	.4	2.328093	2.521594	2.928338
1.8	.5	2.459639	2.715733	3.270231
1.8	.6	2.588525	2.912503	3.633597
1.8	.7	2.713689	3.110079	4.016462
1.8	.8	2.834220	3.306909	4.416555
1.8	.9	2.949378	3.501566	4.831407
1.8	1.0	3.058602	3.692784	5.258445
1.8	1.1	3.161497	3.879476	5.695085
1.8	1.2	3.257826	4.060745	6.138806
1.8	1.3	3.347492	4.235880	6.587213
1.8	1.4	3.430512	4.404345	7.038080
1.8	1.5	3.506999	4.565766	7.489381
1.8	1.6	3.577142	4.719909	7.939307
1.8	1.7	3.641184	4.866663	8.386257
1.8	1.8	3.699410	5.006017	8.828865
1.8	1.9	3.752129	5.138043	9.265958
1.8	2.0	3.799662	5.262881	9.696557
1.8	2.1	3.842339	5.380719	10.119863
1.8	2.2	3.880486	5.491783	10.535232
1.8	2.3	3.914422	5.596327	10.942161
1.8	2.4	3.944453	5.694622	11.340273
1.8	2.5	3.970875	5.786949	11.729294

Copyright Naval Air Systems Command
Provided by IHS
No reproduction or networking permitted without license from IHS

Licensee=NASA Technical Standards 4/9972545004, User=Aziz, Syed
Not for Resale, 05/31/2015 16:29:48 MDT

TABLE B-V-II.

90th, 95th and 99th percentiles of the lognormal distribution for means and sigmas from .1 to 2.5 (continued).

MEAN	SIGMA	90 PERCENT	95 PERCENT	99 PERCENT
1.9	.1	2.029672	2.068827	2.144327
1.9	.2	2.161652	2.245683	2.412223
1.9	.3	2.294803	2.429432	2.703645
1.9	.4	2.427958	2.618776	3.018101
1.9	.5	2.559968	2.812304	3.354667
1.9	.6	2.689744	3.008547	3.712012
1.9	.7	2.816297	3.206033	4.088458
1.9	.8	2.938758	3.403342	4.482047
1.9	.9	3.056402	3.599144	4.890622
1.9	1.0	3.168655	3.792234	5.311902
1.9	1.1	3.275087	3.981554	5.743564
1.9	1.2	3.375412	4.166206	6.183305
1.9	1.3	3.469467	4.345450	6.628900
1.9	1.4	3.557202	4.518704	7.078249
1.9	1.5	3.638660	4.685530	7.529403
1.9	1.6	3.713962	4.845625	7.980587
1.9	1.7	3.783286	4.998800	8.430213
1.9	1.8	3.846857	5.144969	8.876876
1.9	1.9	3.904933	5.284125	9.319358
1.9	2.0	3.957791	5.416346	9.756613
1.9	2.1	4.005720	5.541744	10.187760
1.9	2.2	4.049016	5.660490	10.612068
1.9	2.3	4.087972	5.772782	11.028943
1.9	2.4	4.122875	5.878845	11.437912
1.9	2.5	4.154005	5.978920	11.838609
2.0	.1	2.129604	2.168618	2.243739
2.0	.2	2.261455	2.344912	2.509864
2.0	.3	2.394528	2.527873	2.798364
2.0	.4	2.527771	2.716343	3.108848
2.0	.5	2.660141	2.909063	3.440546
2.0	.6	2.790639	3.104712	3.792337
2.0	.7	2.918344	3.301960	4.162786
2.0	.8	3.042436	3.499503	4.550199
2.0	.9	3.162209	3.696105	4.952687
2.0	1.0	3.277087	3.890629	5.368230
2.0	1.1	3.386621	4.082055	5.794741
2.0	1.2	3.490486	4.269495	6.230124
2.0	1.3	3.588472	4.452200	6.672324
2.0	1.4	3.680474	4.629556	7.119371
2.0	1.5	3.766475	4.801081	7.569411
2.0	1.6	3.846535	4.966416	8.020727
2.0	1.7	3.920775	5.125311	8.471755
2.0	1.8	3.989366	5.277614	8.921088
2.0	1.9	4.052515	5.423256	9.367483
2.0	2.0	4.110456	5.562241	9.809850
2.0	2.1	4.163439	5.694630	10.247251
2.0	2.2	4.211727	5.820534	10.678886
2.0	2.3	4.255585	5.940099	11.104087
2.0	2.4	4.295278	6.053505	11.522302
2.0	2.5	4.331068	6.160948	11.933087

12 Jan 1984

Copyright Naval Air Systems Command
Provided by IHS
No reproduction or networking permitted without license from IHS
Licensee=NASA Technical Standards 4/9972545004, User=Aziz, Syed
Not for Resale, 05/31/2015 16:29:48 MDT

TABLE B-V-II.

90th, 95th and 99th percentiles of the lognormal distribution for means and sigmas from .1 to 2.5 (continued).

MEAN	SIGMA	90 PERCENT	95 PERCENT	99 PERCENT
2.1	.1	2.229543	2.268427	2.343207
2.1	.2	2.361270	2.444209	2.607729
2.1	.3	2.494256	2.626438	2.893580
2.1	.4	2.627548	2.814081	3.200446
2.1	.5	2.760195	3.006004	3.527686
2.1	.6	2.891280	3.201021	3.874346
2.1	.7	3.019946	3.397921	4.239196
2.1	.8	3.145418	3.595509	4.620765
2.1	.9	3.267018	3.792639	5.017397
2.1	1.0	3.384176	3.988242	5.427299
2.1	1.1	3.496432	4.181340	5.848597
2.1	1.2	3.603436	4.371067	6.279387
2.1	1.3	3.704941	4.556676	6.717781
2.1	1.4	3.800797	4.737536	7.161940
2.1	1.5	3.890940	4.913135	7.610113
2.1	1.6	3.975376	5.083070	8.060654
2.1	1.7	4.054176	5.247043	8.512040
2.1	1.8	4.127461	5.404848	8.962883
2.1	1.9	4.195392	5.556361	9.411934
2.1	2.0	4.258160	5.701526	9.858080
2.1	2.1	4.315979	5.840353	10.300343
2.1	2.2	4.369076	5.972897	10.737874
2.1	2.3	4.417690	6.099259	11.169948
2.1	2.4	4.462060	6.219570	11.595948
2.1	2.5	4.502428	6.333988	12.015363
2.2	.1	2.329486	2.368253	2.442724
2.2	.2	2.461097	2.543564	2.705789
2.2	.3	2.593991	2.725115	2.989227
2.2	.4	2.727302	2.911974	3.292786
2.2	.5	2.860160	3.103121	3.615929
2.2	.6	2.991722	3.297483	3.957844
2.2	.7	3.121191	3.493956	4.317468
2.2	.8	3.247836	3.691445	4.693522
2.2	.9	3.371008	3.888889	5.084546
2.2	1.0	3.490148	4.085280	5.488951
2.2	1.1	3.604796	4.279692	5.905053
2.2	1.2	3.714983	4.471285	6.331127
2.2	1.3	3.819237	4.659322	6.765437
2.2	1.4	3.918574	4.843166	7.206278
2.2	1.5	4.012486	5.022286	7.652004
2.2	1.6	4.100938	5.196250	8.101049
2.2	1.7	4.183956	5.364720	8.551944
2.2	1.8	4.261616	5.527446	9.003333
2.2	1.9	4.334037	5.684257	9.453976
2.2	2.0	4.401371	5.835049	9.902754
2.2	2.1	4.463794	5.979782	10.348668
2.2	2.2	4.521501	6.118465	10.790835
2.2	2.3	4.574703	6.251151	11.228486
2.2	2.4	4.623613	6.377930	11.660955
2.2	2.5	4.668453	6.498920	12.087674

Copyright Naval Air Systems Command
Provided by IHS
No reproduction or networking permitted without license from IHS

Licensee=NASA Technical Standards 4/9972545004, User=Aziz, Syed
Not for Resale, 05/31/2015 16:29:48 MDT

TABLE B-V-11.

90th, 95th and 99th percentiles of the lognormal distribution for means and sigmas from .1 to 2.5 (continued).

MEAN	SIGMA	90 PERCENT	95 PERCENT	99 PERCENT
2.3	.1	2.429433	2.468094	2.542284
2.3	.2	2.560934	2.642971	2.804017
2.3	.3	2.693734	2.823890	3.085248
2.3	.4	2.827041	3.010009	3.385775
2.3	.5	2.960058	3.200404	3.705145
2.3	.6	3.092007	3.394101	4.042662
2.3	.7	3.222147	3.590093	4.397407
2.3	.8	3.349791	3.787374	4.768260
2.3	.9	3.474318	3.984958	5.153937
2.3	1.0	3.595188	4.181905	5.553021
2.3	1.1	3.711939	4.377334	5.964001
2.3	1.2	3.824197	4.570438	6.385313
2.3	1.3	3.931671	4.760495	6.815366
2.3	1.4	4.034147	4.946873	7.252384
2.3	1.5	4.131487	5.129030	7.695425
2.3	1.6	4.223619	5.306513	8.142406
2.3	1.7	4.310531	5.478955	8.592123
2.3	1.8	4.392259	5.646072	9.043260
2.3	1.9	4.468883	5.807653	9.494601
2.3	2.0	4.540519	5.963553	9.945033
2.3	2.1	4.607309	6.113688	10.393549
2.3	2.2	4.669417	6.258025	10.839248
2.3	2.3	4.727024	6.396577	11.281328
2.3	2.4	4.780320	6.529392	11.719086
2.3	2.5	4.829503	6.656553	12.151913
2.4	.1	2.529385	2.567948	2.641880
2.4	.2	2.660781	2.742424	2.902393
2.4	.3	2.793485	2.922754	3.181599
2.4	.4	2.926770	3.108173	3.479336
2.4	.5	3.059905	3.297844	3.795221
2.4	.6	3.192169	3.490875	4.128656
2.4	.7	3.322871	3.686349	4.478841
2.4	.8	3.451367	3.883338	4.844796
2.4	.9	3.577066	4.080928	5.225383
2.4	1.0	3.699445	4.278240	5.619341
2.4	1.1	3.818051	4.474439	6.025312
2.4	1.2	3.932504	4.668755	6.441876
2.4	1.3	4.042502	4.860486	6.867580
2.4	1.4	4.147811	5.048008	7.300966
2.4	1.5	4.248268	5.233777	7.740597
2.4	1.6	4.343769	5.414327	8.185074
2.4	1.7	4.434268	5.590271	8.633062
2.4	1.8	4.519770	5.761297	9.083294
2.4	1.9	4.600320	5.927162	9.534585
2.4	2.0	4.675998	6.087688	9.985841
2.4	2.1	4.746918	6.242751	10.436058
2.4	2.2	4.813211	6.392283	10.884324
2.4	2.3	4.875033	6.536258	11.329821
2.4	2.4	4.932547	6.674689	11.771820
2.4	2.5	4.985930	6.807623	12.209677

Copyright Naval Air Systems Command
Provided by IHS
No reproduction or networking permitted without license from IHS
Licensee=NASA Technical Standards 4/9972545004, User=Aziz, Syed
Not for Resale, 05/31/2015 16:29:48 MDT

TABLE B-V-II.

90th, 95th and 99th percentiles of the lognormal distribution for means and sigmas from .1 to 2.5 (continued).

MEAN	SIGMA	90 PERCENT	95 PERCENT	99 PERCENT
2.5	.1	2.629340	2.667813	2.741508
2.5	.2	2.760637	2.841918	3.000900
2.5	.3	2.893245	3.021698	3.278240
2.5	.4	3.026496	3.206456	3.573402
2.5	.5	3.159713	3.395428	3.886060
2.5	.6	3.292232	3.587802	4.215698
2.5	.7	3.423407	3.782733	4.561619
2.5	.8	3.552631	3.979367	4.922959
2.5	.9	3.679345	4.176857	5.298711
2.5	1.0	3.803044	4.374378	5.687748
2.5	1.1	3.923286	4.571145	6.088849
2.5	1.2	4.039693	4.766421	6.500724
2.5	1.3	4.151953	4.959530	6.922045
2.5	1.4	4.259820	5.148860	7.351468
2.5	1.5	4.363108	5.336869	7.787655
2.5	1.6	4.461690	5.520086	8.229293
2.5	1.7	4.555493	5.699111	8.675115
2.5	1.8	4.644491	5.873610	9.123910
2.5	1.9	4.728699	6.043316	9.574531
2.5	2.0	4.808169	6.208020	10.025909
2.5	2.1	4.882981	6.367570	10.477052
2.5	2.2	4.953244	6.521862	10.927051
2.5	2.3	5.019083	6.670839	11.375079
2.5	2.4	5.080640	6.814480	11.820388
2.5	2.5	5.138070	6.952801	12.262313
2.6	.1	2.729298	2.767688	2.841165
2.6	.2	2.860502	2.941448	3.099521
2.6	.3	2.993014	3.120714	3.375139
2.6	.4	3.126220	3.304848	3.667917
2.6	.5	3.259494	3.493150	3.977580
2.6	.6	3.392217	3.684876	4.303681
2.6	.7	3.523788	3.879250	4.645608
2.6	.8	3.653637	4.075484	5.002601
2.6	.9	3.781231	4.272788	5.373764
2.6	1.0	3.906088	4.470394	5.758088
2.6	1.1	4.027777	4.667560	6.154472
2.6	1.2	4.145924	4.863584	6.561748
2.6	1.3	4.260213	5.057818	6.978699
2.6	1.4	4.370388	5.249664	7.404088
2.6	1.5	4.476249	5.438590	7.836670
2.6	1.6	4.577649	5.624122	8.275218
2.6	1.7	4.674491	5.805851	8.718534
2.6	1.8	4.766724	5.983431	9.165462
2.6	1.9	4.854337	6.156573	9.614901
2.6	2.0	4.937354	6.325046	10.065812
2.6	2.1	5.015831	6.488671	10.517223
2.6	2.2	5.089848	6.647317	10.968234
2.6	2.3	5.159507	6.800897	11.418017
2.6	2.4	5.224927	6.949361	11.865817
2.6	2.5	5.286241	7.092695	12.310950

Copyright Naval Air Systems Command
Provided by IHS
No reproduction or networking permitted without license from IHS

Licensee=NASA Technical Standards 4/9972545004, User=Aziz, Syed
Not for Resale, 05/31/2015 16:29:48 MDT

Copyright Naval Air Systems Command
Provided by IHS
No reproduction or networking permitted without license from IHS

Licensee=NASA Technical Standards 4/9972545004, User=Aziz, Syed
Not for Resale, 05/31/2015 16:29:48 MDT

APPENDIX C

ACCURATE COMPUTER M_{max} (Φ) ANALYSIS

10. This section describes a method for predicting M_{max} Φ when an accurate representation of the overall repair time distribution is desired. The prediction requires that a distribution of time for each maintenance element (i.e., preparation, fault isolation, etc.) be known or assumed.

The prediction is general and can be applied to any definable distribution or combinations thereof, however, the complexity of computing the overall distribution increases proportionately with the complexity of the maintenance element distributions. A simplifying assumption can be made that all maintenance elements have normally distributed times. This simplifying assumption is reasonable since each maintenance element is the sum of many independent task times, e.g. the maintenance task "preparation" may include time for equipment warm-up, acquisition of necessary tools, etc. By the central limit theorem in statistics, the distribution of the maintenance element task time approaches a normal distribution as the sample size of individual task times increases. Based on this assumption the detailed procedure has been developed and a computer program written for computing the desired M_{max} (Φ). Programs based on other distributions of maintenance elements can be similarly developed and programmed.

10.1 General approach. In the general approach, we have a system with total failure rate λ_T, and with N x J possible repair types with random repair times R_{nj}, n=1, ..., N, j=1, ..., J where J is the total number of unique fault detection and isolation outputs and N is the total number of repairable items. Let λ_{nj} be the failure rate of that portion of the nth repairable item which is covered by fault detection and isolation output j. Further, let $f_{R_{nj}}(t)$ be the probability density function for R_{nj}, n=1, ..., N, j=1, ..., J. It is assumed that $f_{R_{nj}}$ is continuous and concentrated on $[0,\infty)$.

If T is the system repair time, then its density function $g_T(t)$ (since the events $T = R_{nj}$ are mutually exclusive) is:

$$g_T(t) = \sum^{*} P_{nj} f_{R_{nj}}(t) \qquad (1)$$

where:

$$\sum^{*} = \sum_{n=1}^{N} \sum_{j=1}^{J} ; \text{ and } P_{nj} = \frac{\lambda_{nj}}{\lambda_T}$$

Copyright Naval Air Systems Command
Provided by IHS
No reproduction or networking permitted without license from IHS

Licensee=NASA Technical Standards 4/9972545004, User=Aziz, Syed
Not for Resale, 05/31/2015 16:29:48 MDT

The mean system repair time is

$$\mu_T\ E(T) = \int_0^\infty t g_T(t)\ dt = \sum^{*} P_{nj} \int_0^\infty t f_{R_{nj}}(t) dt = \sum^{*} P_{nj}\ \mu_{R_{nj}} \qquad (2)$$

where

$\mu_{R_{nj}} = E(R_{nj})$ = mean repair time R_{nj}, and the variance of the system repair time is

$$\sigma_T^2 = E(T^2) - \mu_T^2 = \sum^{*} P_{nj} \int_0^\infty t^2 f_{R_{nj}}(t) dt - \mu_T^2 \qquad (3)$$

$$= \sum^{*} P_{nj}\ (\sigma_{R_{nj}}^2 + \mu_{R_{nj}}^2) - \mu_T^2$$

where

$\mu_{R_{nj}}^2$ = variance of the repair time R_{nj}.

Values of $M_{max}(\Phi)$ are given as solutions to the equation

$$M_{max}(\Phi)\ gT(t)\ dt = \sum^{*} P_{nj} \int_0^{M_{max}(\Phi)} f_{R_{nj}}(t)\ dt = \Phi \qquad (4)$$

which are not, in general, unique. Sufficient conditions for the existence of a unique solution are that $f_{nj}(t) > 0$ for all $t > 0$, $n=1, \ldots, N$, $j=1, \ldots, J$ and that each $f_{nj}(t)$ be continous, conditions easily met in practice. Equation (4) can easily be solved, under these sufficient conditions, by using iterative means on a computer.

10.2 <u>Assuming normal densities for the R_{nj}'s</u>. In practice, R_{nj}, $n=1, \ldots, N$, $j=1, \ldots, J$ are sums of several independent repair element times which are themselves sums of a large number of independent repair task times. An application of the central limit theorem suggests that the densities $f_{R_{nj}}$ are approximately normal.

Specifically, the density $f_{R_{nj}}$ will be (approximately)

$$f_{R_{nj}}(t) = \frac{1}{\sqrt{2\pi}\ \sigma_{R_{nj}}} \exp\left\{ -\frac{1}{2}\left(\frac{t-\mu_{R_{nj}}}{\sigma_{R_{nj}}} \right)^2 \right\}$$

Copyright Naval Air Systems Command 1984
Provided by IHS
No reproduction or networking permitted without license from IHS

Licensee=NASA Technical Standards 4/9972545004, User=Aziz, Syed
Not for Resale, 05/31/2015 16:29:48 MDT

where

$\mu_{R_{nj}}$ and $\sigma_{R_{nj}}^2$ are the sums of the elemental repair time means and variances, respectively. Presumably, $\mu_{R_{nj}}$ and $\sigma_{R_{nj}}^2$ will be such that the normal density is, approximately, concentrated on the positive real axis, i.e.,

$$\frac{1}{\sqrt{2\pi}\,\sigma_{R_{nj}}} \int_{\infty}^{0} \exp\left\{-\frac{1}{2}\left(\frac{t-\mu_{R_{nj}}}{\sigma_{R_{nj}}}\right)^2\right\} dt = 0 \qquad (5)$$

If we let $n(t) = \frac{1}{\sqrt{2\pi}} \int_{\infty}^{t} e^{-x^2/2}\,dx$, then equation 4 becomes

$$\sum^{*} P_{nj}\, n\left(\frac{M_{max}(\Phi) - \mu_{R_{nj}}}{\sigma_{R_{nj}}}\right) = \Phi \qquad (6)$$

which will have a unique solution for all Φ where $0 < \Phi < 1$. The advantage here is that only one density function need be programmed in order to caculate $M_{max}(\Phi)$ using a computer.

10.3 Computer program. A computer program listing is provided in Table C-V-I for performing the normal case described above. A sample input/output for the program is shown in Table C-V-II. The resulting distribution for the example is shown in Figure C-V-I.

The means and variances for each repair element which makes up the individual repair times R_{nj} are inputted. $\mu_{R_{nj}}$ and $\sigma_{R_{nj}}^2$ are then computed and equation (6) is solved for $M_{max}(\Phi)$ for the given Φ using the secant method. The secant method solves equations of the form

$$f(x) = 0$$

Copyright Naval Air Systems Command
Provided by IHS
No reproduction or networking permitted without license from IHS

Licensee=NASA Technical Standards 4/9972545004, User=Aziz, Syed
Not for Resale, 05/31/2015 16:29:48 MDT

by forming the sequence (for n=1, 2, ...)

$$x_{n+1} = x_n - (x_n - x_{n-1})\, f(x_n) / [f(x_n) - f(x_{n-1})]$$

after choosing x_0 and x_1 as starting points. The sequence is terminated after the desired accuracy is reached. Several points concerning the computer program deserve discussion.

First, no integration is performed per se in the calculations of

$$n\left(\frac{M_{max}(\Phi) - \mu_{P_{nj}}}{\sigma_{P_{nj}}}\right)$$

Instead, the following approximation is used.

$$n(t) = \frac{1}{\sqrt{2\pi}} \int_{-\infty}^{t} e^{-x^2/2}\, dx$$

$$= 1 - (\sqrt{2\pi})^{-1} e^{-t^2/2} [b_1 A + b_2 A^2 + b_3 A^3 + b_4 A^4 + b_5 A^5] + \varepsilon(t)$$

where

$|\varepsilon(t)| < 7.5 \times 10^{-8}$ for all t and

$A = 1/(1 + 0.2316419t)$ with the b_i's given by:

$b_1 = 0.319381530$

$b_2 = -0.356563782$

$b_3 = 1.781477937$

$b_4 = -1.821255978$

$b_5 = 1.330274429$

Copyright Naval Air Systems Command
Provided by IHS
No reproduction or networking permitted without license from IHS

Licensee=NASA Technical Standards 4/9972545004, User=Aziz, Syed
Not for Resale, 05/31/2015 16:29:48 MDT

Secondly, the user must provide two initial guesses to $M_{max}(\Phi)$ denoted by XO and X1 in the computer program. It is essential that XO not equal X1 since this would cause "zero divides" in the program. The best way to pick XO and X1 is to estimate an interval which $M_{max}(\Phi)$ will lie. Then, select XO and X1 as the endpoints of the interval.

Finally, although the present discussion deals with double subscripts n and j, the distinctions indicated by these subscripts and independent of the calculations performed. Hence, the program uses the data in single dimensioned arrays of length N x J.

The input data is read in the following order:

XO (Initial estimation), X1 (Initial estimation), PHI (Φ), LT (Total system failure rate)

N1 (Number of elements contributing to first R), LAMBDA (1) (Failure rate)

MU, SIG2	(mean, variance for first element)
MU, SIG2	(mean, variance for 2nd element)
. .	. . . . .
. .	. . . . .
. .	. . . . .

N2 (Number of elements contributing to second R), LAMBDA (2) (Failure rate)

MU, SIG2
. .
. .
. .

The following condition must be met:

$$\sum_{\text{All } I} \text{LAMBDA}(I) = LT$$

Sample input/output, and program listing follow.

Copyright Naval Air Systems Command
Provided by IHS
No reproduction or networking permitted without license from IHS

Licensee=NASA Technical Standards 4/9972545004, User=Aziz, Syed
Not for Resale, 05/31/2015 16:29:48 MDT

TABLE C-V-I. Listing for computer program to compute $M_{max}(\Phi)$ when elemental maintenance activities are normally distributed.

```
      IMPLICIT REAL*8(A-H),REAL*8(O-Z)
      REAL*8 MUR,SIG2R,MU,SIG2,N,LAMBDA,LT
      COMMON PHI, LAMBDA(100),MUR(100),SIG2R(100),ITOTAL
C       X0,X1 ARE INITIAL GUESSES TO MMAX(PHI).  LT IS TOTAL
C       FAILURE RATE OF SYSTEM.
      READ(5,*) X0,X1,PHI,LT
C      ERR=MAX ERROR IN MMAX(PHI)
       ERR=0.005D0
      J=0
   30 J=J+1
      READ(5,*,END=10) NN,LAMBDA(J)
      LAMBDA(J)=LAMBDA(J)/LT
      MUR(J)=0.D0
      SIG2R(J)=0.D0
      DO 20 I=1,NN
C       NN IS THE NUMBER OF ELEMENTS TO FOLLOW.
C       LAMBDA(J) IS THE FAILURE RATE OF THE REPLACEABLE ITEM
C       WHOSE REPAIR TIME IS MADE UP OF THE ELEMENTS WHICH FOLLOW.
      READ(5,*) MU,SIG2
C       MU IS THE MEAN, SIG2 IS THE VARIANCE OF EACH ELEMENT.
      MUR(J)=MUR(J)+MU
   20 SIG2R(J)=SIG2R(J)+SIG2
      GO TO 30
   10 ITOTAL=J-1
      XN=X1
      XNM1=X0
   40 XN1=XN-(XN-XNM1)*F(XN)/(F(XN)-F(XNM1))
      WRITE(6,2) XN1
C       MMAX(PHI) IS PRINTED AT EACH ITERATION.
      IF(DABS(XN1-XN).LE.ERR) GO TO 50
      XNM1=XN
      XN=XN1
      GO TO 40
   50 CONTINUE
      WRITE(6,1) PHI,XN1
    1 FORMAT(1X,'MMAX(',F4.3,')=',F7.2)
    2 FORMAT(5X,F10.2)
      STOP
      END
      FUNCTION N(T)
      IMPLICIT REAL*8(A-H,N),REAL*8(O-Z)
C  STANDARD NORMAL DISTRIBUTION FUNCTION
C  FOR THE METHOD, SEE THE NATIONAL BUREAU OF STANDARDS
C  HANDBOOK OF MATHEMATICAL FUNCTIONS
      A=1.D0/(1.D0+.2316419D0*T)
      Z=.39894228D0*DEXP(-.5D0*(T**2))
      N=.319381530D0*A-.356563782D0*(A**2)
      N=N+1.781477937D0*(A**3)-1.821255978*(A**4)
      N=N+1.330274429D0*(A**5)
      N=1.D0-Z*N
      RETURN
      END
      FUNCTION F(X)
      IMPLICIT REAL*8(A-H,L,M,N),REAL*8(O-Z)
       COMMON PHI, LAMBDA(100),MUR(100),SIG2R(100),ITOTAL
       F=0.D0
       DO 10 I=1,ITOTAL
   10  F=F+LAMBDA(I)*N((X-MUR(I))/SIG2R(I))
       F=F-PHI
       RETURN
       END
```

Copyright Naval Air Systems Command
Provided by IHS
No reproduction or networking permitted without license from IHS

Licensee=NASA Technical Standards 4/9972545004, User=Aziz, Syed
Not for Resale, 05/31/2015 16:29:48 MDT

TABLE C-V-II. Sample input/output data for $M_{max}(\psi)$ computer program.

Input Data

```
7.0D0   9.0D0   .90D0   350.0D0
4    50.0D0
2.0D0    .24D0
2.2D0    .21D0
1.8D0    .20D0
2.1D0    .18D0
2    100.0D0
2.7D0    .15D0
3.0D0    .14D0
4    50.0D0
1.5D0    .10D0
1.4D0    .08D0
1.7D0    .11D0
1.9D0    .09D0
2    50.0D0
1.0D0    .05D0
1.3D0    .80D0
```

Output from Program

```
8.17
8.09
8.10
8.10
MMAX(.900)=   8.10
```

Copyright Naval Air Systems Command
Provided by IHS
No reproduction or networking permitted without license from IHS

Licensee=NASA Technical Standards 4/9972545004, User=Aziz, Syed
Not for Resale, 05/31/2015 16:29:48 MDT

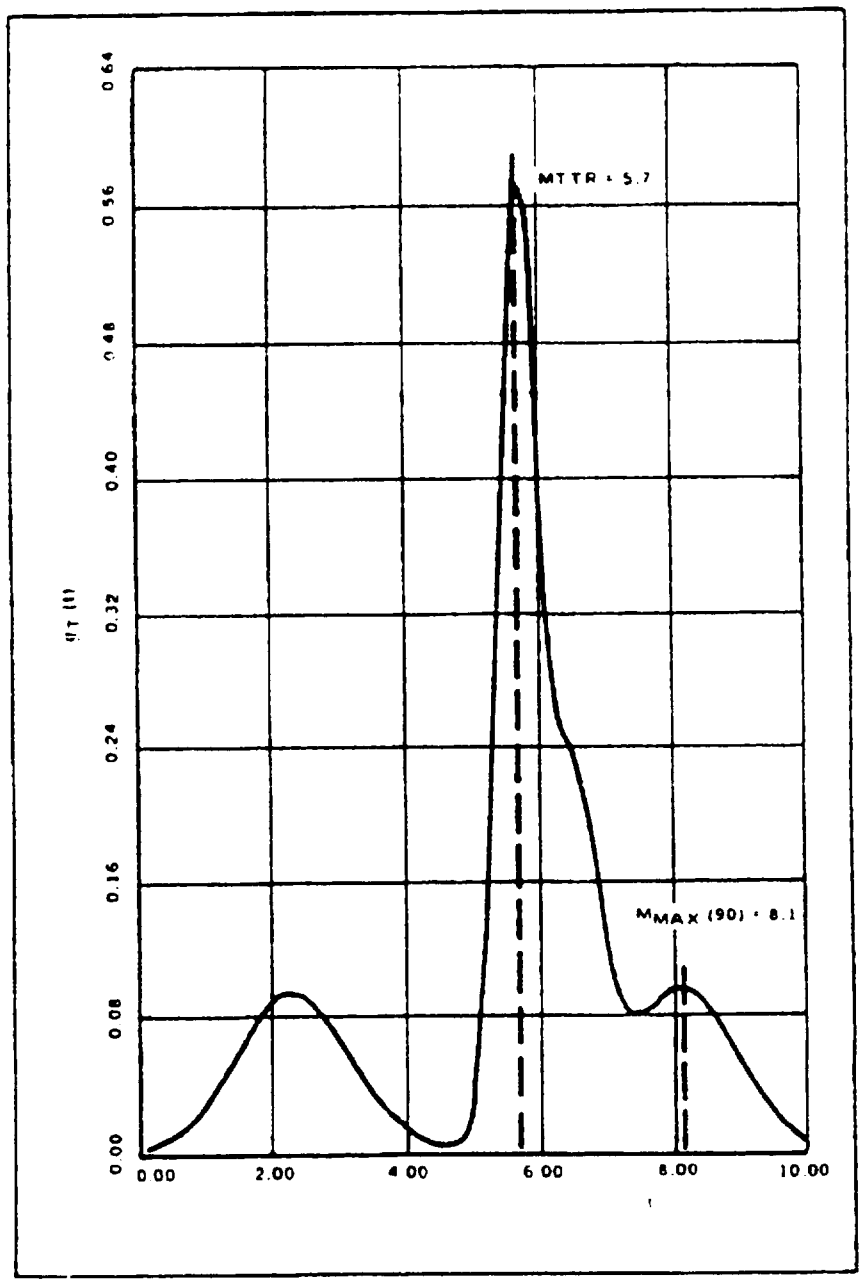

FIGURE C-V-I. Resulting repair time distribution for a sample system containing four (4) repair types with different normally distributed repair times.

Copyright Naval Air Systems Command
Provided by IHS
No reproduction or networking permitted without license from IHS

Licensee=NASA Technical Standards 4/9972545004, User=Aziz, Syed
Not for Resale, 05/31/2015 16:29:48 MDT

APPENDIX D

ACCURATE MANUAL M_{max} Φ ANALYSIS

10. An alternative to the accurate computer M_{max} (Φ) analysis is presented. The previous technique, Appendix C uses a computerized, iterative technique to solve the equation. A complete development of the proposed manual M_{max} (Φ) technique is given here. The technique is illustrated using the prediction example described in paragraph 10.3 of appendix C. Where possible, the same terminology and abbreviations used in paragraph 10 of the computerized technique are also used here. Two alternatives are given for handling large numbers of types of repairs:

a. Reference is made to a programmable slide rule calculator program which speeds up the calculation procedures.

b. A method of grouping the data is described and illustrated with a prediction example.

20. The manual M_{max} (Φ) analysis is based on the same two basic premises of the computerized technique. Before giving these premises, some key terminology is first defined. There are NxJ possible system repair types with random system repair times R_{nj}, n=1, ..., N, j=1, ..., J where N is the total number of repairable items and J is the total number of unique fault detection and isolation (FD&I) outputs. The system repair times R_{nj} are themselves the sum of the applicable maintenance element 1/ type times E_{mnj}

where m indicates the element type and where the element types are defined as follows:

a. Fault localization

b. Fault isolation

c. Disassembly

1/ This element of repair time has units of hours and should not be confused with the probability density element introduced later, which has units of probability.

Copyright Naval Air Systems Command
Provided by IHS
No reproduction or networking permitted without license from IHS

Licensee=NASA Technical Standards 4/9972545004, User=Aziz, Syed
Not for Resale, 05/31/2015 16:29:48 MDT

d. Interchange

e. Reassembly

f. Alignment

g. Checkout

The first premise is that at least the mean (μ_{E_m}) and variance ($\sigma_{E_m}^2$) of each of the $E_{m_{nj}}$ are known. 2/ The second premise is based on the central limit theorem which suggests that the pdf of each of the individual R_{nj} approaches a normal distribution with a mean ($\mu_{R_{nj}}$) formed from the sum of the respective (μ_{E_m}'s).

$$\mu_{R_{nj}} = \sum^{M} \mu_{E_m} \qquad (1)$$

where $\sum^{M}$ indicates the sum is taken over all applicable element types and a variance ($\sigma_{R_{nj}}^2$) formed from the sum of the respective $\sigma_{E_m}^2$'s 3/

$$\sigma_{R_{nj}}^2 = \sum^{M} \sigma_{E_m}^2 \qquad (2)$$

2/ The obvious additional subscript nj is omitted on μ_{E_m} and $\sigma_{E_m}^2$ throughout the discussion.

3/ In forming the $\sigma_{R_{nj}}^2$'s as the sum of the respective $\sigma_{E_m}^2$'s, the variables are assumed to be uncorrelated. It is noted that it is not essential to know the distribution of the E_m times, merely their μ_{E_m}'s and $\sigma_{E_m}^2$'s.

Copyright Naval Air Systems Command
Provided by IHS
No reproduction or networking permitted without license from IHS

Licensee=NASA Technical Standards 4/9972545004, User=Aziz, Syed
Not for Resale, 05/31/2015 16:29:48 MDT

30. Both the computerized and the manual calculation techniques are subject to the same inaccuracies inherent in the assumption of normality. Although the central limit theorem is usually applicable only for large numbers, there is evidence that it is applicable (i.e., its use gives reasonably accurate results) for the type of situation treated here when as few as six E_{nj}'s are used and the percentile value is not larger than 95 percent. The accuracy of $M_{max}(\Phi)$ for the case just refered to does decrease significantly at the higher percentiles - i.e., at 99 percent. Fortunately, $M_{max}(\Phi)$ requirements are usually limited to 90 or 95 percent.

40. Let $f_{R_{nj}}(t)$ be the pdf for the system repair times R_{nj}. There are NxJ possible different $f_{R_{nj}}(t)$'s. By definition, the $f_{R_{nj}}(t)$ are non-negative functions whose integrals, when extended over the entire t axis, are unity. For a given $f_{R_{nj}}(t)$, the probability that the nj'^h type of system repair is completed in the infinitely small interval (t, t+dt) is $f_{R_{nj}}(t)\,dt$. The quantity $f_{R_{nj}}(t)dt$ is called the probability density element at the point t. The relative probability of the nj'^h type of system repair occurring, P_{nj} is:

$$P_{nj} = \lambda_{nj}/\Sigma\lambda \qquad (3)$$

Where λ_{nj} is the failure rate in failures per million hours associated with the nj'^h type of system repair and $\Sigma\lambda$ is the total system failure rate of repairable items. 4/ P_{nj} is also the relative probability of the nj'^h probability density element. The combined probability of nj'^h type of system repair occurring and being completed in the intervals (t, t+dt) is $P_{nj}f_{R_{nj}}(t)dt$. The combined probability of any of the NxK possible system repair types occuring and being completed in the interval (t,t+dt) is

4/ Note that P_{nj} is based on all failures and repair procedures that lead to system repair nj. A particular P_{nj} may result from failure of a single component, several components in series, several redundant components, or some other combinations of components. Thus, any system, whether formed of series, redundant, or some other combination of components may be analyzed by both the computerized and the manual calculation techniques providing the λ_{nj} values can be determined.

Copyright Naval Air Systems Command
Provided by IHS
No reproduction or networking permitted without license from IHS

Licensee=NASA Technical Standards 4/9972545004, User=Aziz, Syed
Not for Resale, 05/31/2015 16:29:48 MDT

(since the R_{nj} random events are mutually exclusive) the sum of the relative probabilities of each of the NxJ possible probability density elements multipled by each corresponding probability density element at time t. This is $\Sigma^{*} P_{nj} F_{R_{nj}}(t)dt$, where $\Sigma^{*} = \sum_{n=1}^{N} \sum_{j=1}^{J}$. This expression is the probability system repair, completed in the time interval (t, t + dt). It is also the system repair probability density element at time t. Using the probability density element definition given above, $\Sigma^{*} P_{nj} f_{R_{nj}}(t)$ is the pdf of the system repair time T, i.e.,

$$g_T(t) = f_{R_{nj}}(t) = \Sigma^{*} P_{nj} f_{R_{nj}}(t) \qquad (4)$$

50. Before using $\Sigma^{*} P_{nj} f_{R_{nj}}(t)$ as the pdf of system repair time T, it must be shown that this function is a pdf - i.e., that it is non-negative and its integral over the entire t axis is unity. Since it is formed from the sum of non-negative functions, this function is also non-negative. The integral of the function over the entire t axis is $\Sigma^{*} P_{nj} \int_0^{\infty} f_{R_{nj}}(t)dt$. This is just the sum of the relative probabilities of each NxJ possible system repair type probability density element multiplied by the integral, over the entire t axis, of the pdf of each NxJ possible system repair type. As stated in paragraph 40, these integrals of pdf's are by definition each unity. Each of the NxJ possible P_{nj}'s in the function are thus multiplied by unity and the integral, over the entire t axis, of the function becomes just $\Sigma^{*} P_{nj}$. This is the sum of the relative probabilities of each NxJ possible system repair type probability density element occurring, and this sum, as with the sum of any complete set of relative probabilties, is unity. Thus, the integral of the function over the entire t axis is unity.

Copyright Naval Air Systems Command
Provided by IHS
No reproduction or networking permitted without license from IHS

Licensee=NASA Technical Standards 4/9972545004, User=Aziz, Syed
Not for Resale, 05/31/2015 16:29:48 MDT

60. Let the cumulative distribution function (cdf) of T be $G_T(t)$. By definition of the relationship between the pdf and cdf:

$$\int_0^t g_T(t)\,dt = G_T(t) \tag{5}$$

Since $G_T(t)$ is the probability of completing system repair at time t or less, it follows that:

$$\int_0^{M_{max}(\Phi)} g_T(t)dt = \sum^{*} P_{nj} \int_0^{M_{max}(\Phi)} f_{R_{nj}}(t)dt = \Phi \quad \underline{5}/ \tag{6}$$

where $M_{max}(\Phi)$ represents the value of t at which the probability of repair is Φ.

70. The integral $\int_0^{M_{max}(\Phi)} f_{R_{nj}}(t)dt$ is the probability of completing repair type nj at time t or less. This integral is also the area under the pdf curve of repair type nj up to (at) a particular t value. To simplify equation (6), let

$$F_{nj}(t) = \int_0^{M_{max}(\Phi)} f_{R_{nj}}(t)\,dt \tag{7}$$

Equation (6) becomes

$$\int_0^{M_{max}(\Phi)} g_T(t)dt = \sum^{*} P_{nj}F_{nj}(t) = \Phi \tag{8}$$

5/ This is equation 4 of paragraph 10.1 of Appendix C.

Copyright Naval Air Systems Command
Provided by IHS
No reproduction or networking permitted without license from IHS
Licensee=NASA Technical Standards 4/9972545004, User=Aziz, Syed
Not for Resale, 05/31/2015 16:29:48 MDT

Note that the derivation of equation (8) holds for any distribution of R_{nj}. Thus, if the form of pdf of the R_{nj} and the parameters necessary to characterize the pdf distribution of the R_{nj} are known, both the computerized and the manual calculation techniques can be used without assuming the pdf of each of the individual R_{nj} is normal.

80. To solve equation (8), it is necessary only to find the t value for which the sum, over all NxJ possible system repair types, of $P_{nj}F_{nj}(t)$ gives the desired Φ. Values of P_{nj} are calculated as indicated by equation (4). Values of $F_{nj}(t)$ are found from tables of area under suitable pdf curves. An inital t is selected and evaluated. Successive t values are then examined until the desired Φ is obtained, to the desired level of accuracy.

90. The prediction example used here to illustrate the manual calculation technique is the example described in paragraph 10.3 of the computerized technique. The individual R_{nj} are assumed to have normal pdf's. Table D-V-I contains the input data for the $E_{m_{nj}}$ comprising each nj system repair type, plus the μ_{E_m} and $\sigma_{E_m}^2$ for each E_m of each nj system repair type. Using this input data, the individual nj system repair type $\mu_{R_{nj}}$, $\sigma_{R_{nj}}^2$ and P_{nj} are calculated as described above in paragraphs 20 and 40 and as indicated in footnoes 1/ through 3/ of Table D-V-II. Columns 2 through 4, respectively, of Table D-V-II present these calculated values for the individual nj repair types. Columns 5 through 8, respectively, of Table D-V-II present the calculated values of F_{nj}, $P_{nj}F_{nj}$ and Φ for four iteratively-selected trial values of t. As shown, the desired Φ value of 0.90 is achieved at 8.10 hours. This is the same value given in paragraph 10.3 of Appendix C for the example computer output.

Copyright Naval Air Systems Command
Provided by IHS
No reproduction or networking permitted without license from IHS

Licensee=NASA Technical Standards 4/9972545004, User=Aziz, Syed
Not for Resale, 05/31/2015 16:29:48 MDT

100. The prediction example described above indicates the relative simplicity of the manual calculation technique. Although applied in the example to a system comprised of only four individual repair types, the technique is applicable to any number of repair types. For large numbers of repair types, it would be convenient to use a programmable calculator with a normal distribution program.

110. Another practical calculation alternative for handling large numbers of repair types with the manual calculation technique is by grouping the data. It is assumed the necessary calculations have been made to obtain the $\mu_{R_{nj}}$'s and $\sigma_{R_{nj}}^2$'s, or they are given directly. Group the ordered repair type $\mu_{R_{nj}}$'s into i time intervals of length Δt. For each set of data a most suitable number, i, of classes can be found. Sturges has developed the simple rule $i = 1+3.3 \log_{10} N$ where i is the number of classes and N is the number of data. Approximate the actual distribution of repair type $\mu_{R_{nj}}$'s in each of the i time intervals by a normal distribution with a mean (μ_i) calculated as th failure rate-weighted repair type mean

$$\mu_i = \sum^{i} \mu_{R_{nj}} \lambda_{nj} / \sum^{i} \lambda \qquad (10)$$

where $\sum^{i}$ indicates the sum is taken over the i'th interval and a variance (σ_i^2) calculated as the failure rate-weighted repair type variance

$$\sigma_i^2 = \sum^{i} \sigma_{R_{nj}}^2 \lambda_{nj} / \sum^{i} \lambda \qquad (11)$$

Copyright Naval Air Systems Command
Provided by IHS
No reproduction or networking permitted without license from IHS

Licensee=NASA Technical Standards 4/9972545004, User=Aziz, Syed
Not for Resale, 05/31/2015 16:29:48 MDT

TABLE D-V-I. Prediction example input data.

Ordered Individual Repair Type (nj) 1/	Failure Rate (λ_{nj}) (Failures per 10^6 Hours)	Maintenance Element (E_m) 2/ Mean (μ_{E_m}) (Hours) and Variance ($\sigma_{E_m}^2$) ($Hours^2$) 3/							
		E_1		E_2		E_3		E_4	
		μ_{E_1}	$\sigma_{E_1}^2$	μ_{E_2}	$\sigma_{E_2}^2$	μ_{E_3}	$\sigma_{E_3}^2$	μ_{E_4}	$\sigma_{E_4}^2$
1	50	1.0	0.0025	1.3	0.64	4/			
2	100	2.7	0.225	3.0	0.0196				
3	50	1.5	0.01	1.4	0.0064	1.7	0.0121	1.9	0.0081
4	50	2.9	0.0576	2.2	0.0441	1.8	0.04	2.1	0.0324

$\Sigma\lambda = 250$

1/ Once the individual nj repair types are identified, no distinction between n and j is required. The repair types are referred to here simply by their order number.

2/ The obvious additional subscript nj is omitted here on E_m, μ_{E_m} and $\sigma_{E_m}^2$.

3/ All element times are assumed to have an unknown distribution, with μ_{E_m} and $\sigma_{E_m}^2$ shown.

4/ Blanks indicate there are no respective E_m actions for that particular repair type.

Copyright Naval Air Systems Command
Provided by IHS
No reproduction or networking permitted without license from IHS
12 Jan 1964
Licensee=NASA Technical Standards 4/9972545004, User=Aziz, Syed
Not for Resale, 05/31/2015 16:29:48 MDT

Table D-V-II.

Prediction Example Manual Calculation of M_{max} (ϕ) (ϕ = 0.90)

Ordered Individual Repair Type (nj)	Mean of Ordered Individual Repair Type Time (Hours) ($\mu_{R_{nj}}$) 1/	Variance of Ordered Individual Repair Type Time (Hours^2) ($\sigma_{R_{nj}}^2$) 2/	Probability of Individual Repair (P_{nj}) 3/	First t Selected-8.0 Hours		Second t Selected-8.05 Hours		Third t Selected-8.09 Hours		Fourth t Selected-8.10 Hours	
				F_{nj} 4/	$P_{nj}F_{nj}$	F_{nj}	$P_{nj}F_{nj}$	F_{nj}	$P_{nj}F_{nj}$	F_{nj}	$P_{nj}F_{nj}$
1	2.3	0.6425	0.2	0.9999	0.2	0.9999	0.2	0.9999	0.2	0.9999	0.2
2	5.7	0.0421	0.4	0.9999	0.4	0.9999	0.4	0.9999	0.4	0.9999	0.4
3	6.5	0.0366	0.2	0.9999	0.2	0.9999	0.2	0.9999	0.2	0.9999	0.2
4	8.1	0.1741	0.2	0.4052	0.0810	0.4522	0.0904	0.4920	0.0984	0.5000	0.1000
			ΣP_{nj}=1.0		Σ=0.8810 5/		Σ=0.8904		Σ=0.8984		Σ=0.9000

1/ $\mu_{R_{nj}}$ = Σ respective element μ_{E_m}'s from Table D-V-I.

2/ $\sigma_{R_{nj}}^2$ = Σ respective element $\sigma_{E_m}^2$'s from Table D-V-I.

3/ $P_{nj} = \lambda_{nj}/\Sigma\lambda$, where λ_{nj} and $\Sigma\lambda$ values are taken from Table D-V-I.

4/ F_{nj} values are taken from a table of areas underneath the normal probability distribution curve. This table is entered with values of $\mu_{R_{nj}}$, $\sigma_{R_{nj}}$ and t. Specifically, enter the table with values of $(t-\mu_{R_{nj}})/\sigma_{R_{nj}}$ standard deviations.

5/ $\Sigma P_{nj}F_{nj} = \phi$

Copyright Naval Air Systems Command
Provided by IHS
No reproduction or networking permitted without license from IHS
Licensee=NASA Technical Standards 4/9972545004, User=Aziz, Syed
Not for Resale, 05/31/2015 16:29:48 MDT

--`,,,,,,```,,,,```,,,,```,,,,```,,,,-`-`,,`,,`,`,,`---

Copyright Naval Air Systems Command
Provided by IHS
No reproduction or networking permitted without license from IHS

Licensee=NASA Technical Standards 4/9972545004, User=Aziz, Syed
Not for Resale, 05/31/2015 16:29:48 MDT

BIBLIOGRAPHY

1. Maintainability - Prediction: Theoretical Basis and Practical Approach of, USAF Aeronautical Systems Division, 15 Feb 1962.

2. Maintainability - Prediction: Theoretical Basis and Practical Approach of, USAF Aeronautical Systems Division, 31 Dec 1963.

3. Maintainability - Design Criteria Handbook for Designers of Shipboard Electronic Equipment, NAVSHIPS 94324, 30 Apr 1962.

4. A Research Plan for Developing Methods of Maintainability Measurement and Prediction, Rome Air Development Center Tech. Note No. RADC-TN-60-5, AD-231 090, 6 Jan 1960.

5. A Review of the Literature on Design of Information Job Performance Aids. Proj. No. 1710. USAF Airborne Systems Division Report No. ASDTR 61-549, 1961.

6. Maintainability Measurement and Prediction Methods for A.F. Ground Electronic Equipments, Phase II Report RADC-TN-61-141, AD-262 454, 15 Jun 1961.

7. Maintainability Measurement and Prediction Methods for A. F. Ground Electronic Equipments, Phase II Report RADC-TN-60-221, AD-247 155, 15 Sep 1961.

8. Maintainability - Prediction Technique, Phase IV Report RADC-TDR-62-156, AD-277 199, 15 Mar 1962.

9. Maintainability Engineering, Phase V Report RADC-TDR-63-85, Vol. 2, AD-404 898, 5 Feb 1963.

10. Maintainbility Technique Study, Final Technical Report, Phase V Report RADC-TDR-63-85, Vol. 1 AD-404 899, 5 Feb 1963.

11. Maintainability and Supportablity Evaluation Technique, Wright-Air Development Division, Part I, Part II, Vols. 1 and 2, May and Jun 1960.

12. Maintainability Prediction and Analysis Study, Final Technical Report RADC-TR-78-169, AD-A059753, Jul 1978.

Copyright Naval Air Systems Command
Provided by IHS
No reproduction or networking permitted without license from IHS

Licensee=NASA Technical Standards 4/9972545004, User=Aziz, Syed
Not for Resale, 05/31/2015 16:29:48 MDT

Copyright Naval Air Systems Command
Provided by IHS
No reproduction or networking permitted without license from IHS

Licensee=NASA Technical Standards 4/9972545004, User=Aziz, Syed
Not for Resale, 05/31/2015 16:29:48 MDT